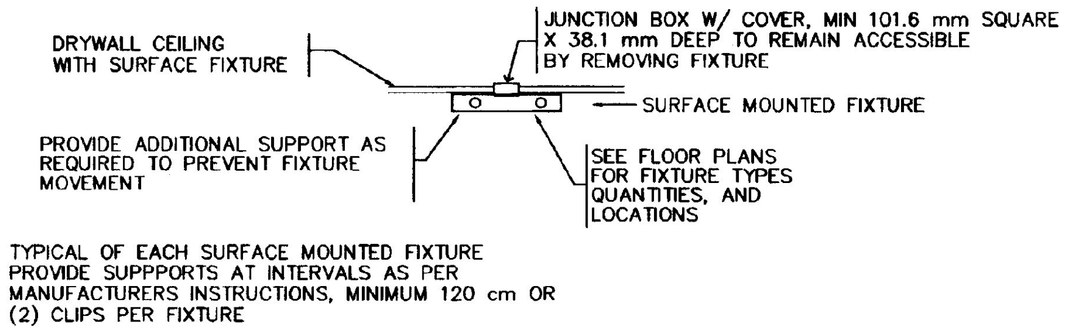

SURFACE MOUNTED FIXTURE SUPPORT DETAIL
NOT TO SCALE

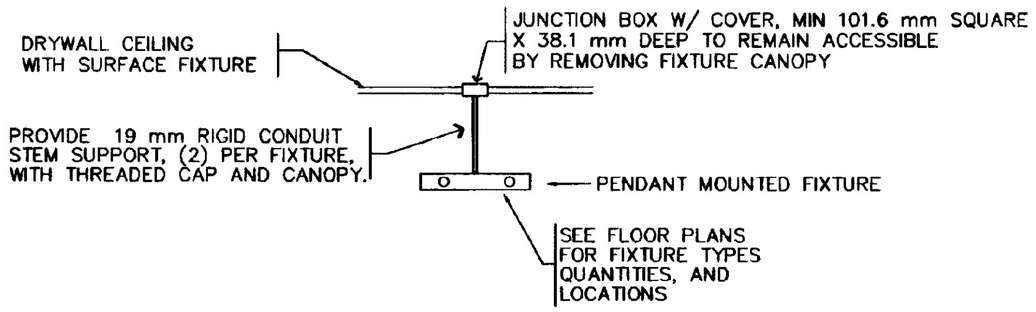

SUSPENDED MOUNTED FIXTURE SUPPORT DETAIL
NOT TO SCALE

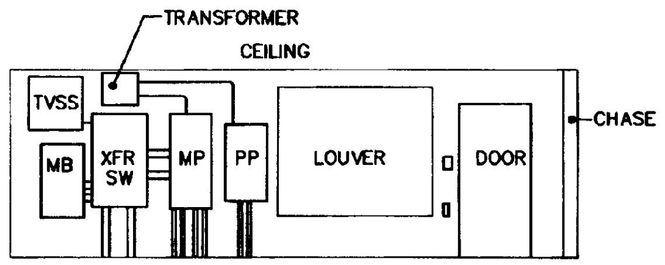

ELEVATION OF ELECTRIC EQUIPMENT WALL – A–A
NOT TO SCALE

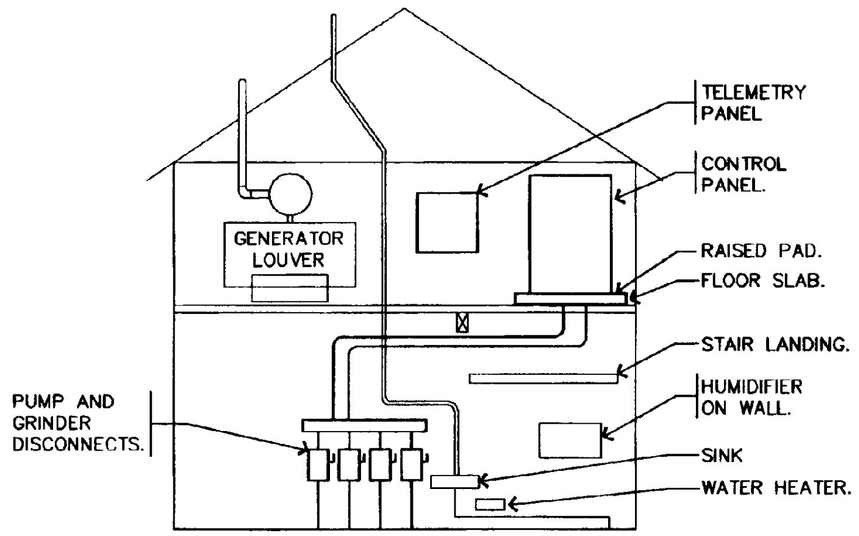

ELEVATION OF CONTROL EQUIPMENT B–B
NOT TO SCALE

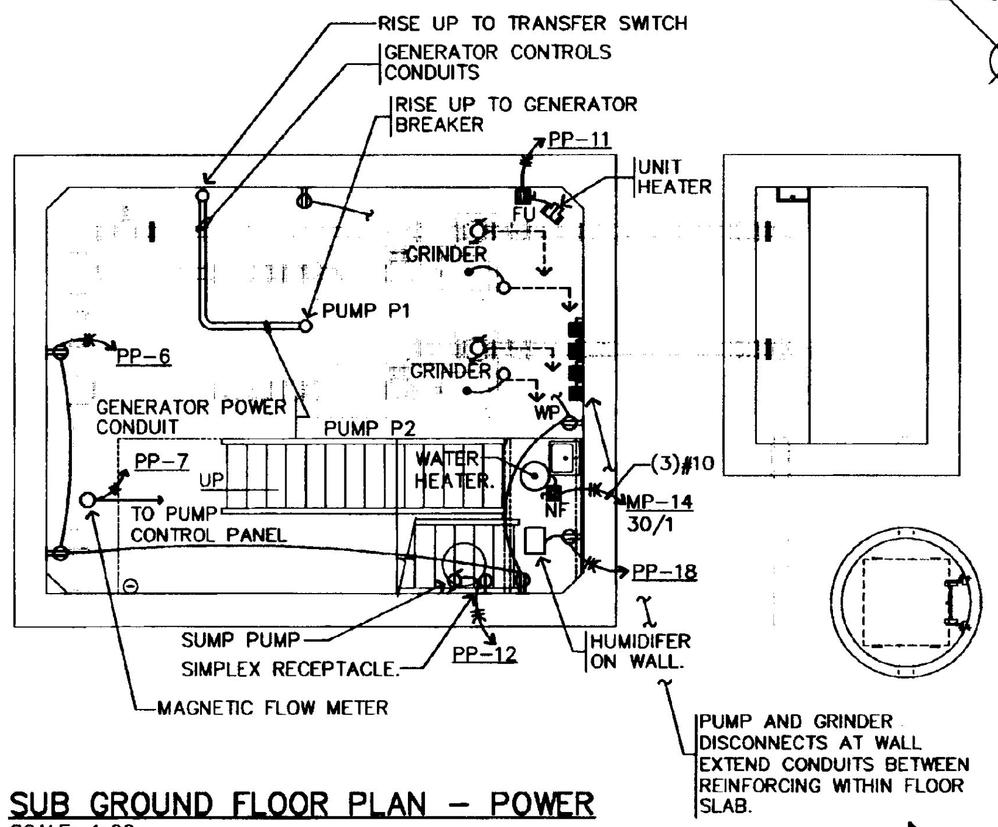

SUB GROUND FLOOR PLAN – POWER
SCALE: 1:60

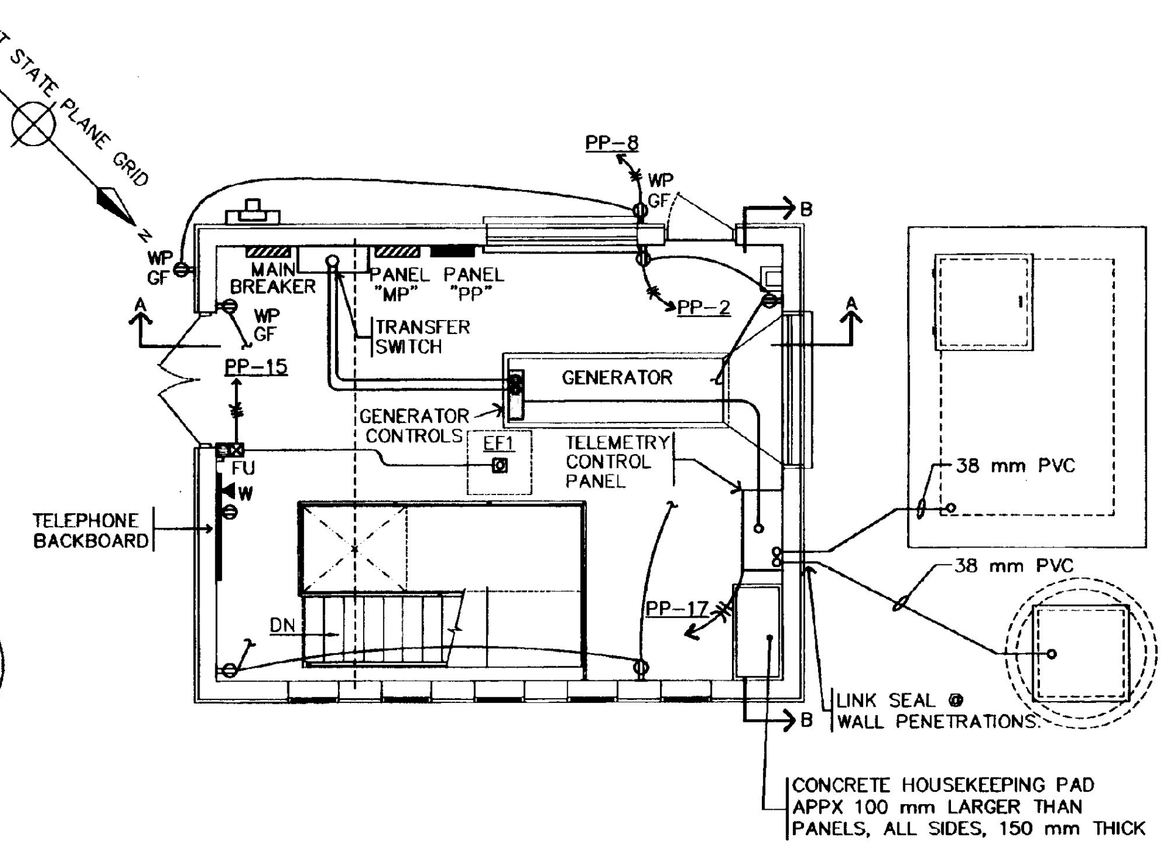

GROUND FLOOR PLAN – POWER
SCALE: 1:60

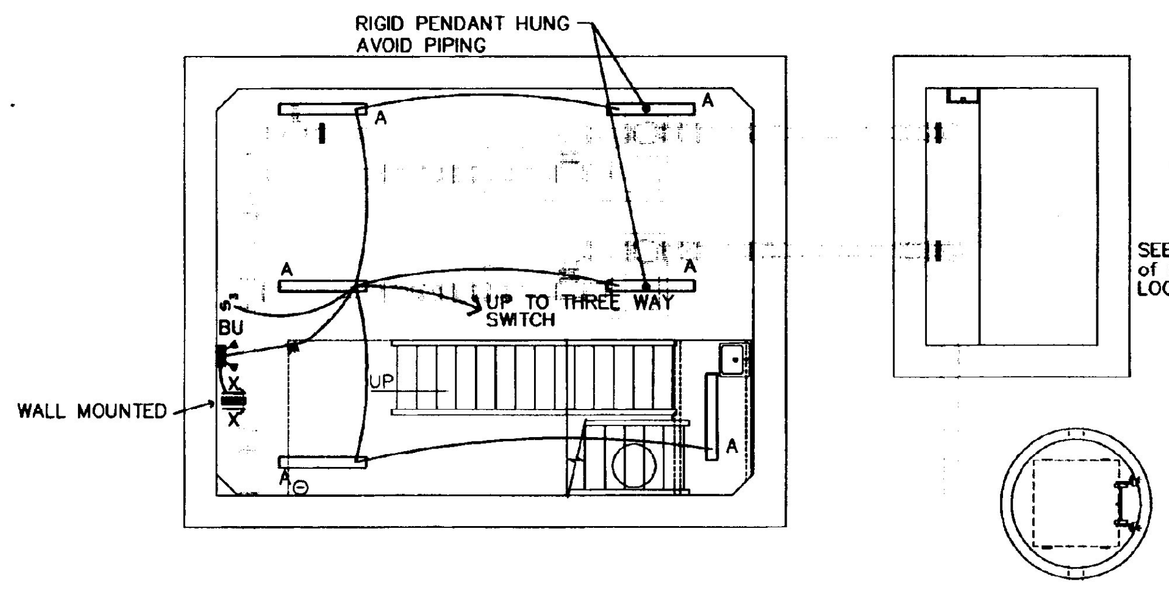

SUB GROUND FLOOR PLAN – LIGHTING
SCALE: 1:60

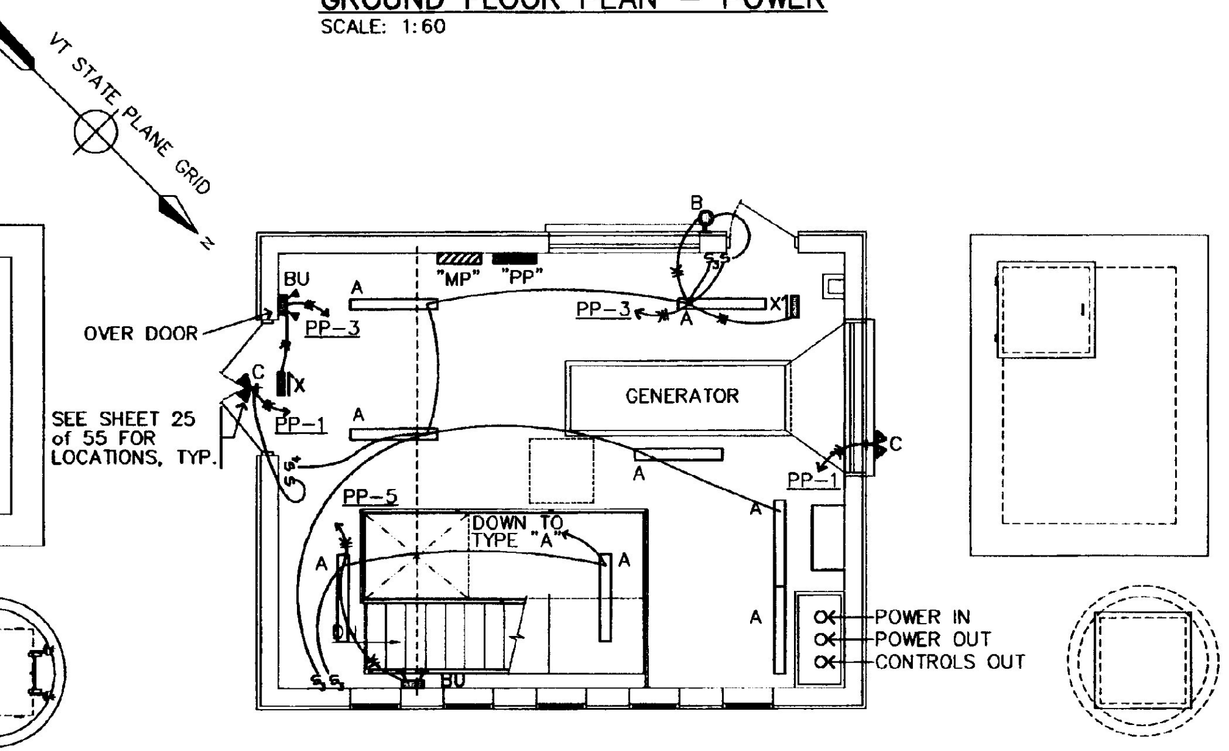

GROUND FLOOR PLAN – LIGHTING
SCALE: 1:60

NOTE:
REFER TO STRUCTURAL PLANS FOR FLOOR SLAB PENETRATIONS IN REINFORCED CONCRETE.

NO.	DATE	REVISIONS	DRWN	CHKD
4	12/26/96	CONTRACT PLANS	CTS	WRW
1	4/8/96	INTERNAL REVIEW		

TIMOTHY D. SMITH & ASSOCIATES, PC ARCHITECTS
OLD RAILROAD STATION NORTH BENNINGTON, VERMONT 05257
802-442-8184 FAX 802-442-5241
WRIGHT ENGINEERING, LTD. CIVIL ENGINEERS
128 MERCHANTS ROW – P.O. BOX 176 RUTLAND, VERMONT 05702-0176
802-775-2511 FAX 802-775-8915

PROJECT NO.IM 091-1 (29)
WATER & SEWER EXTENSION PROJECT
TOWN OF GUILFORD
TOWN OF BRATTLEBORO

SHEET TITLE: PUMP STATION ELECTRICAL AND LIGHTING PLANS, SCHEDULES AND DETAILS

DSGN BY: WRW
DRWN BY: CTS
CHKD BY: WRW
CHKD BY: WRW

STATE OF VERMONT
AGENCY OF TRANSPORTATION
SOUTHEAST VERMONT WELCOME CENTER
GUILFORD, VERMONT

DATE: 01/02/96 SHEET NO. 39 OF 55 SHEETS