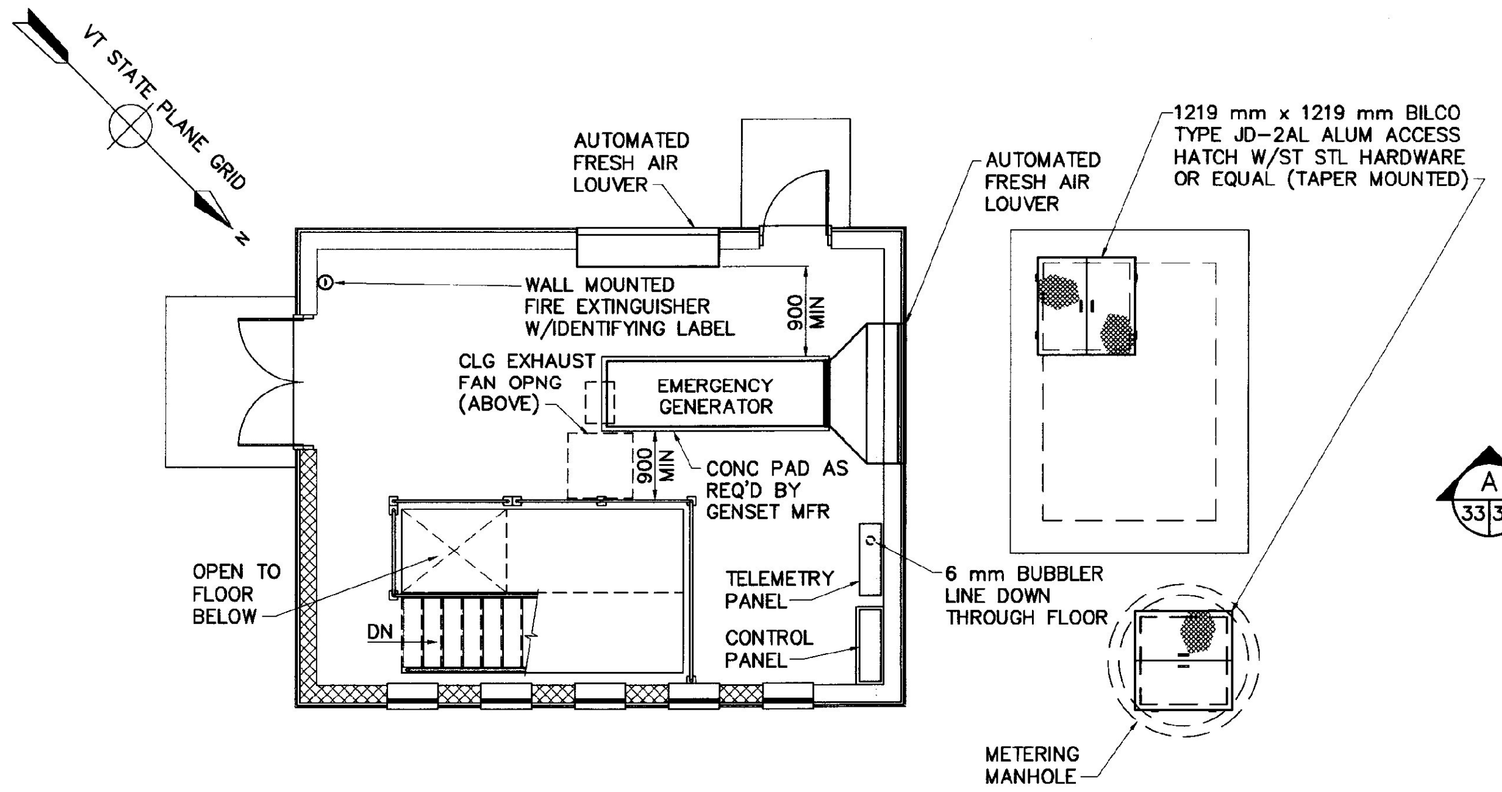

GROUND FLOOR PLAN
SCALE: 1:60

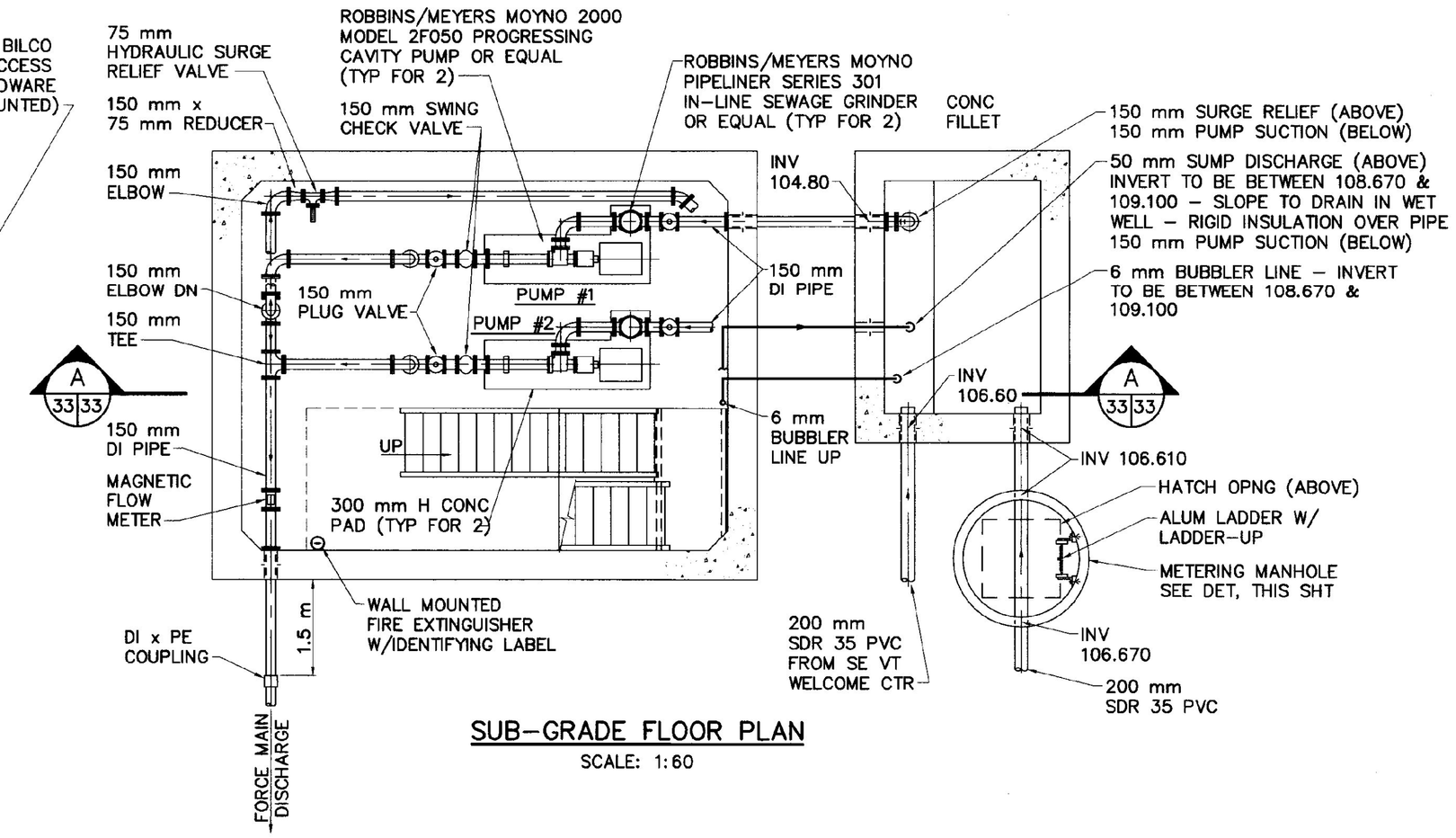

SUB-GRADE FLOOR PLAN
SCALE: 1:60

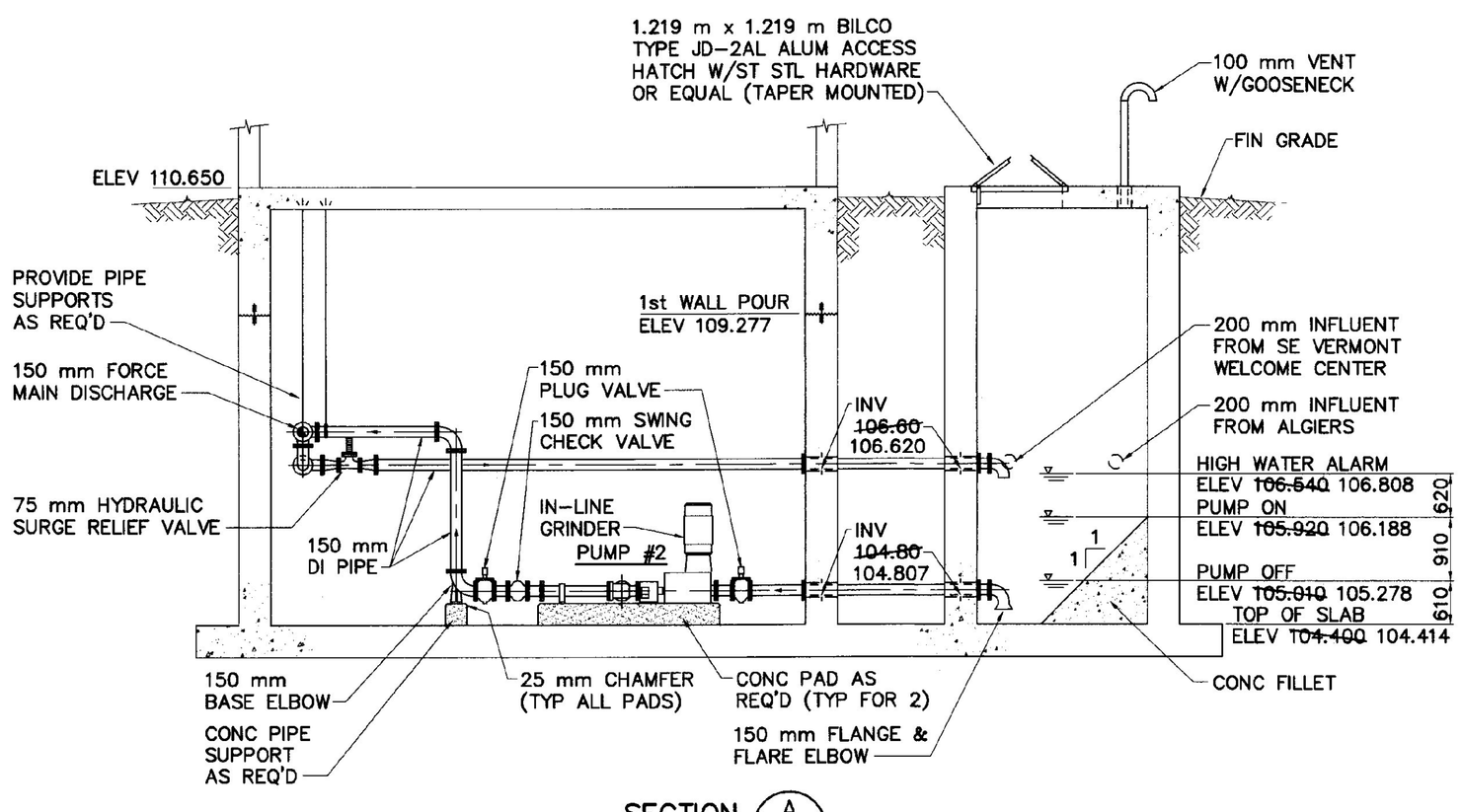

SECTION A 33 33
SCALE: 1:60

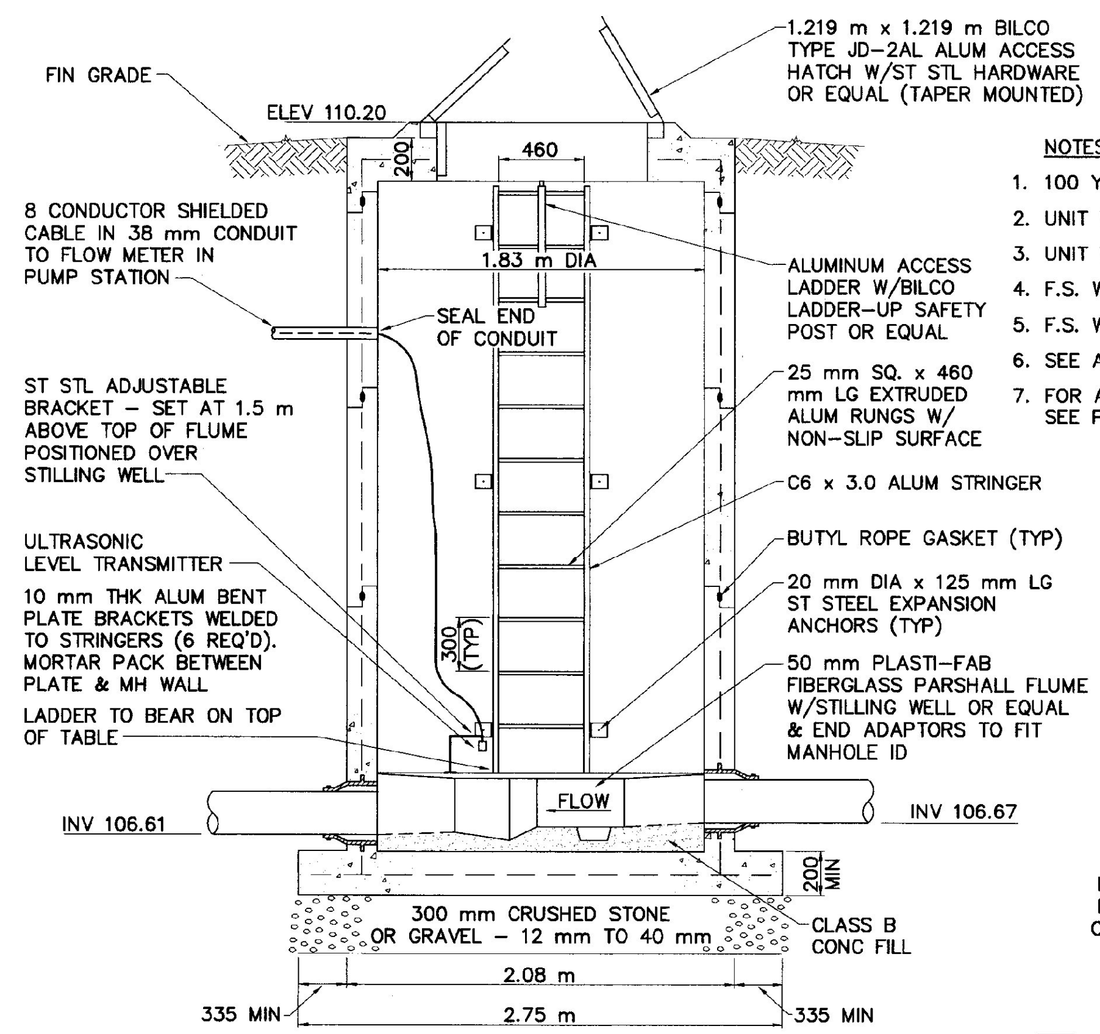

METERING MANHOLE DETAIL
NOT TO SCALE

NOTES:

1. 100 YR. HWL = 109.73 m
2. UNIT WEIGHT DRY = 1,282 kg/m^3 MIN
3. UNIT WEIGHT SATURATED = 1,602 kg/m^3 MIN
4. F.S. W/O SOIL FRICTION = 1.13
5. F.S. W/SOIL FRICTION = 2.36
6. SEE ALSO NOTE 10 ON SHEET 32
7. FOR ADDITIONAL MANHOLE INFORMATION SEE PRECAST MANHOLE DETAIL, SHT 34

RECORD DRAWING

SHOWN PICTORALLY MAY NOT BE TO SCALE

THESE AS-BUILT OR RECORD DRAWINGS HAVE BEEN PREPARED, IN PART, ON THE BASIS OF INFORMATION COMPILED AND FURNISHED BY OTHERS. THE ENGINEER WILL NOT BE RESPONSIBLE FOR ANY ERRORS OR OMISSIONS WHICH HAVE BEEN INCORPORATED INTO THIS DOCUMENT AS A RESULT OF INFORMATION BY OTHERS.

VAOT Metric

NO.	DATE	REVISIONS	DRWN	CHKD
5	9/30/98	AS-BUILT INFORMATION ADDED	DSM	KAS
4	12/26/96	CONTRACT PLANS	DSM	MPY
3	11/11/96	FINAL REVIEW REVISIONS	DSM	MPY
2	6/4/96	REVISIONS PER REVIEW COMMENTS	DSM	MPY
1	4/8/96	REVISIONS PER REVIEW COMMENTS	DSM	MPY

TIMOTHY D. SMITH & ASSOCIATES, PC ARCHITECTS
OLD RAILROAD STATION NORTH BENNINGTON, VERMONT 05257
802-442-8184 FAX 802-442-5241
WRIGHT ENGINEERING, LTD. CIVIL ENGINEERS
128 MERCHANTS ROW – P.O. BOX 176 RUTLAND, VERMONT 05702-0176
802-775-2511 FAX 802-775-8915

STATE OF VERMONT KEVIN M. SMITH No. 5864 REGISTERED PROFESSIONAL ENGINEER 9/30/98

PROJECT NO.IM 091-1 (29)
WATER & SEWER EXTENSION PROJECT
TOWN OF GUILFORD
TOWN OF BRATTLEBORO

SHEET TITLE: PUMP STATION PLANS, SECTIONS AND METERING MANHOLE DETAIL

DSGN BY: MPY
DRWN BY: DSM
CHKD BY: JAC
CHKD BY: MPY

STATE OF VERMONT
AGENCY OF TRANSPORTATION
SOUTHEAST VERMONT WELCOME CENTER
GUILFORD, VERMONT

DATE: 1-2-96 SHEET NO. 33 OF 55 SHEETS

C:\ACAD12\9501\95013348 Fri Oct 9 13:34:22 1998