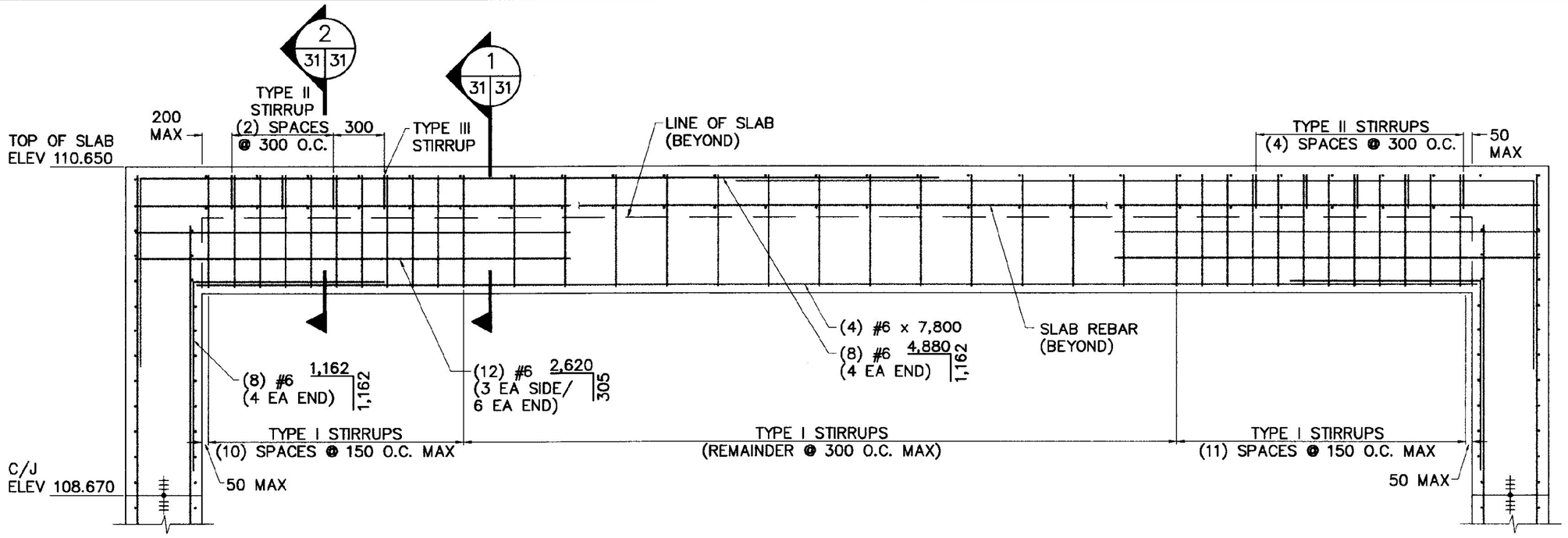

SECTION H
SCALE: 1:20 29 31

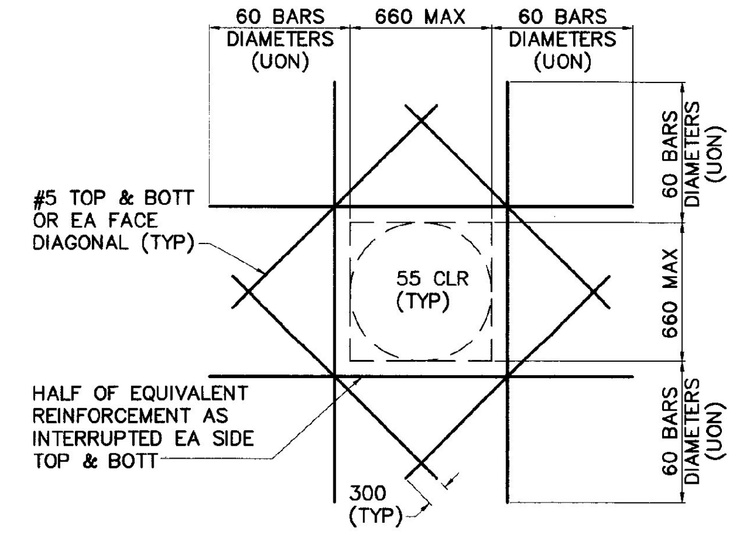

CONCRETE WALL OR SLAB OPENING DETAIL

NOT TO SCALE

(FOR PENETRATIONS NOT SHOWN ON PLANS WHICH REQUIRE BAR TRUNCATION)

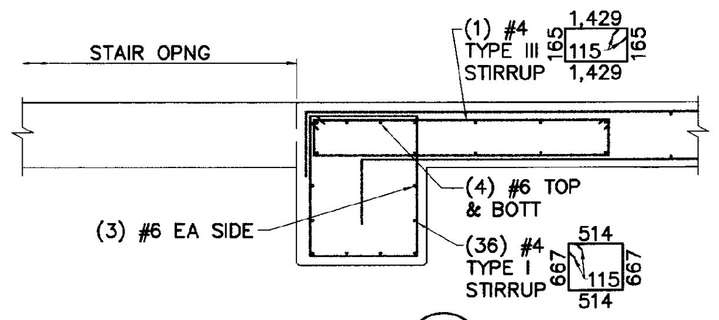

SECTION 1
SCALE: 1:20 31 31

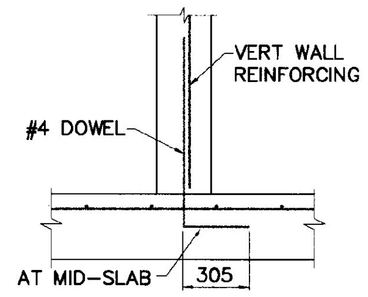

OPTION I

DOWEL PLACEMENT PRIOR TO CONCRETE SLAB PLACEMENT

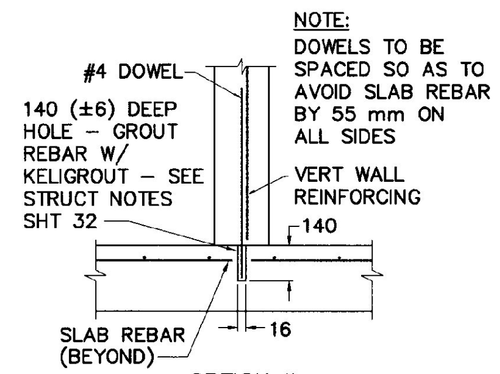

OPTION II

DRILL AND GROUT DOWELS AFTER CONCRETE SLAB PLACEMENT

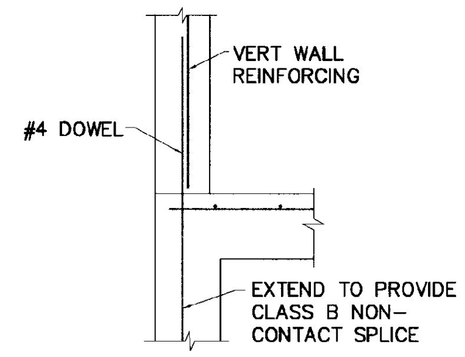

OPTION III

DOWEL PLACEMENT PRIOR TO CONCRETE WALL PLACEMENT

BUILDING WALL ANCHORAGE DETAILS

NOT TO SCALE

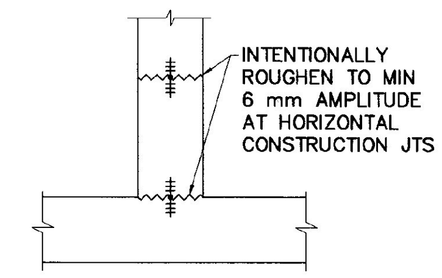

JOINT ROUGHENING DETAIL

NOT TO SCALE

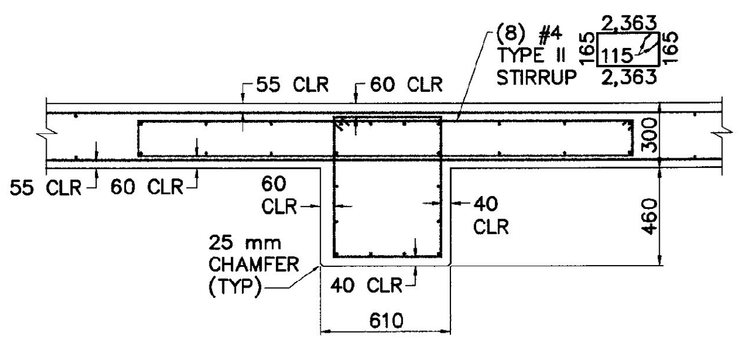

SECTION 2
SCALE: 1:20 31 31

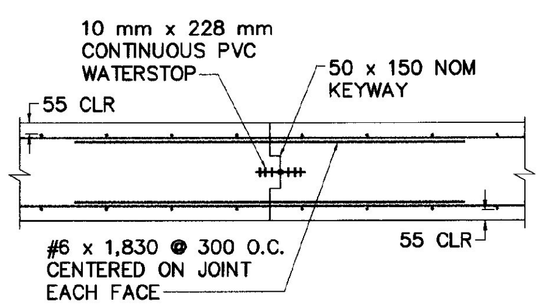

CONSTRUCTION JOINT DETAIL

NOT TO SCALE

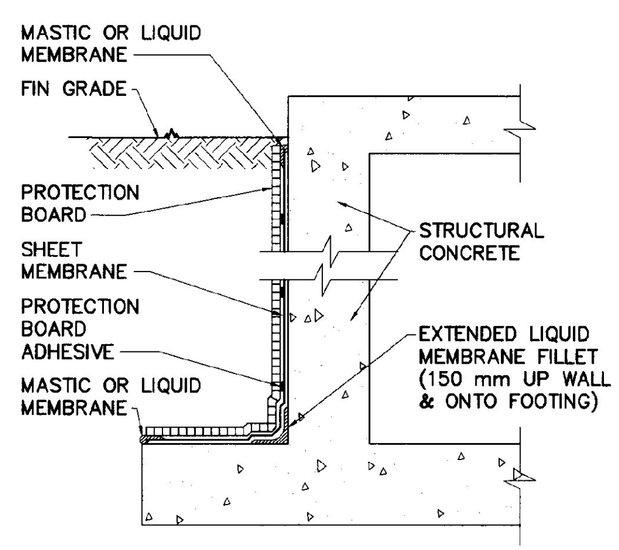

AT FOUNDATION WALL

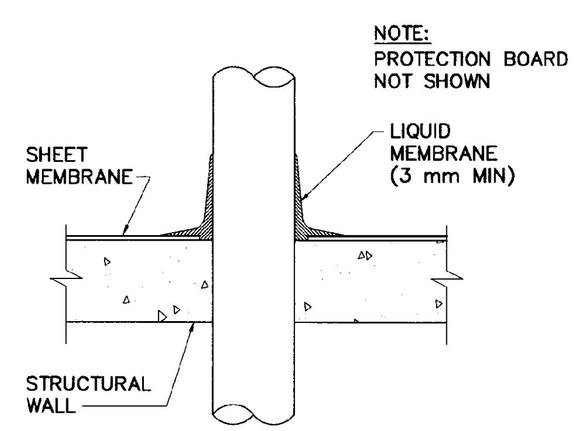

AT PENETRATIONS

SHEET MEMBRANE WATERPROOFING DETAILS

NOT TO SCALE

RECORD DRAWING

SHOWN PICTORALLY
MAY NOT BE TO SCALE

THESE AS-BUILT OR RECORD DRAWINGS HAVE BEEN PREPARED, IN PART, ON THE BASIS OF INFORMATION COMPILED AND FURNISHED BY OTHERS. THE ENGINEER WILL NOT BE RESPONSIBLE FOR ANY ERRORS OR OMISSIONS WHICH HAVE BEEN INCORPORATED INTO THIS DOCUMENT AS A RESULT OF INFORMATION BY OTHERS.

VAOT Metric

NO.	DATE	REVISIONS	DRWN	CHKD
5	9/30/98	NO AS-BUILT INFORMATION ADDED	DSM	KAS
4	12/26/96	CONTRACT PLANS	DSM	MPY
3	11/11/96	FINAL REVIEW REVISIONS	DSM	MPY
2	6/4/96	REVISIONS PER REVIEW COMMENTS	DSM	MPY
1	4/8/96	REVISIONS PER REVIEW COMMENTS	DSM	MPY

TIMOTHY D. SMITH & ASSOCIATES, PC ARCHITECTS
OLD RAILROAD STATION NORTH BENNINGTON, VERMONT 05257
802-442-6184 FAX 802-442-5241
WRIGHT ENGINEERING, LTD. CIVIL ENGINEERS
128 MERCHANTS ROW – P.O. BOX 176 RUTLAND, VERMONT 05702-0176
802-775-2511 FAX 802-775-8915

STATE OF VERMONT KEVIN B. SMITH No. 5864 REGISTERED PROFESSIONAL ENGINEER

PROJECT NO.IM 091-1 (29)
WATER & SEWER EXTENSION PROJECT
TOWN OF GUILFORD
TOWN OF BRATTLEBORO

SHEET TITLE: PUMP STATION SECTIONS AND DETAILS – STRUCTURAL

DSGN BY: KAS
DRWN BY: DSM
CHKD BY: KAS
CHKD BY: MPY

STATE OF VERMONT
AGENCY OF TRANSPORTATION
SOUTHEAST VERMONT WELCOME CENTER
GUILFORD, VERMONT

DATE: 1-2-96 SHEET NO. 31 OF 55 SHEETS

C:\ACAD12\3501\95013140 Fri Oct 9 13:31:25 1998