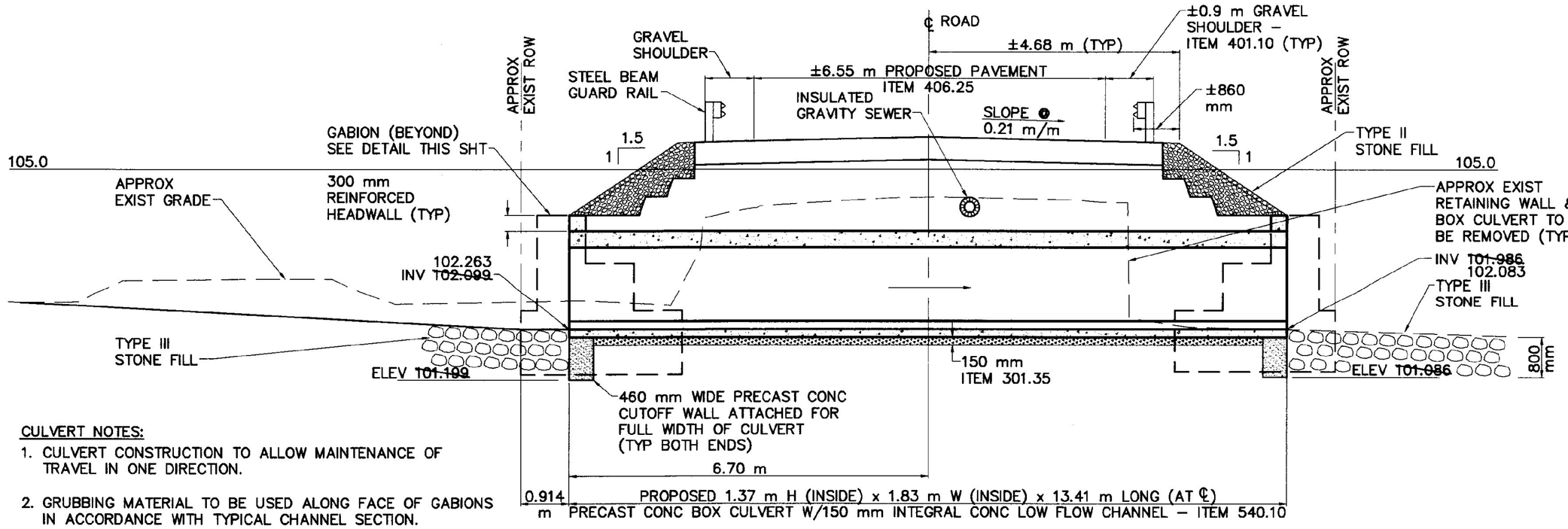

BOX CULVERT LONGITUDINAL SECTION

SCALE: 1:60

CULVERT NOTES:

1. CULVERT CONSTRUCTION TO ALLOW MAINTENANCE OF TRAVEL IN ONE DIRECTION.
2. GRUBBING MATERIAL TO BE USED ALONG FACE OF GABIONS IN ACCORDANCE WITH TYPICAL CHANNEL SECTION.
3. APPROX OPEN END AREA W/LOW FLOW CHANNEL = 2.55 m^2.
4. LIVE LOAD: HS 20-44.
5. CULVERT TO BE DESIGNED BY MANUFACTURER BASED ON GEOMETRY, LOCATION AND LOADING REQUIREMENTS PROVIDED.

RECORD DRAWING

SHOWN PICTORALLY MAY NOT BE TO SCALE

THESE AS-BUILT OR RECORD DRAWINGS HAVE BEEN PREPARED, IN PART, ON THE BASIS OF INFORMATION COMPILED AND FURNISHED BY OTHERS. THE ENGINEER WILL NOT BE RESPONSIBLE FOR ANY ERRORS OR OMISSIONS WHICH HAVE BEEN INCORPORATED INTO THIS DOCUMENT AS A RESULT OF INFORMATION BY OTHERS.

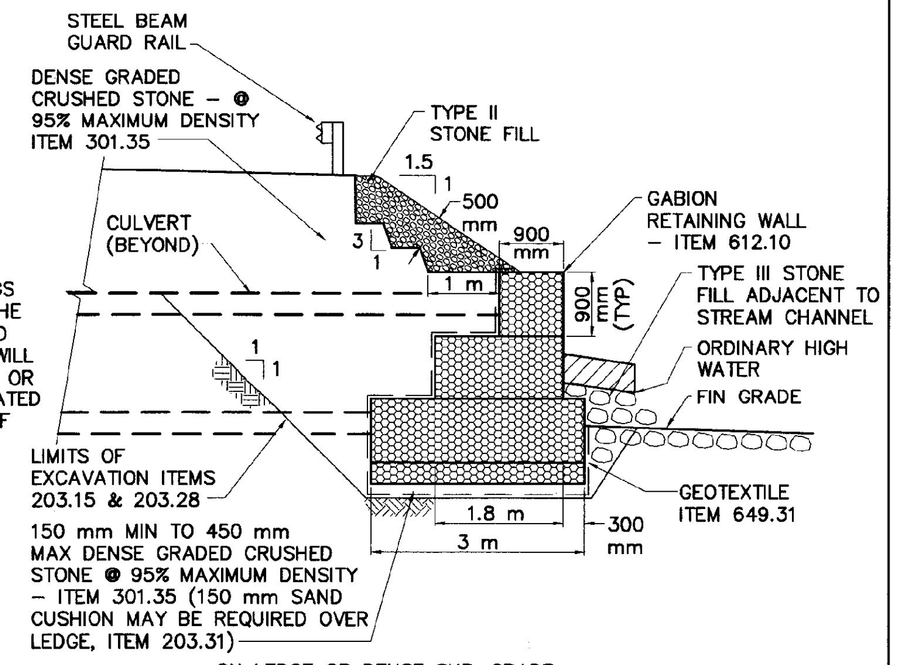

ON LEDGE OR DENSE SUB-GRADE

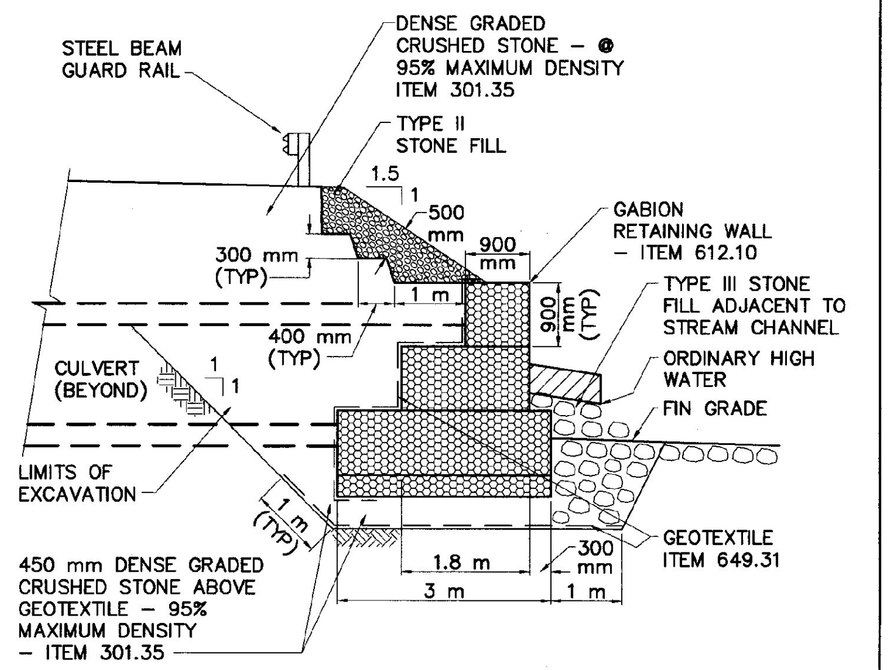

ON LOOSE OR UNSTABLE SOIL

GABION RETAINING WALL DETAILS

SCALE: 1:60

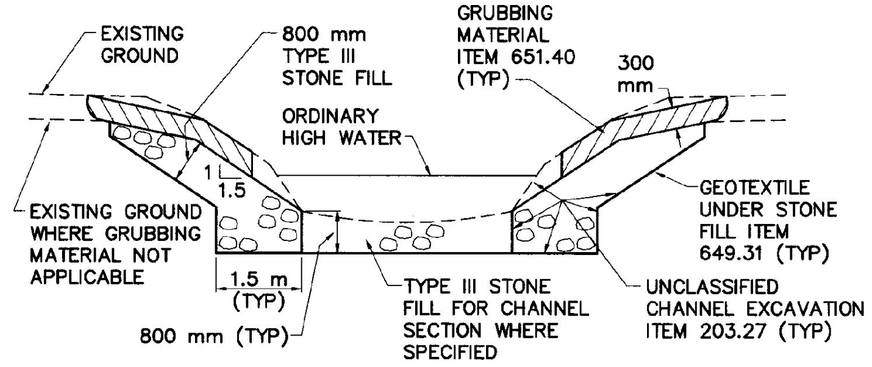

TYPICAL CHANNEL SECTION (TYPE III STONE FILL)

NOT TO SCALE

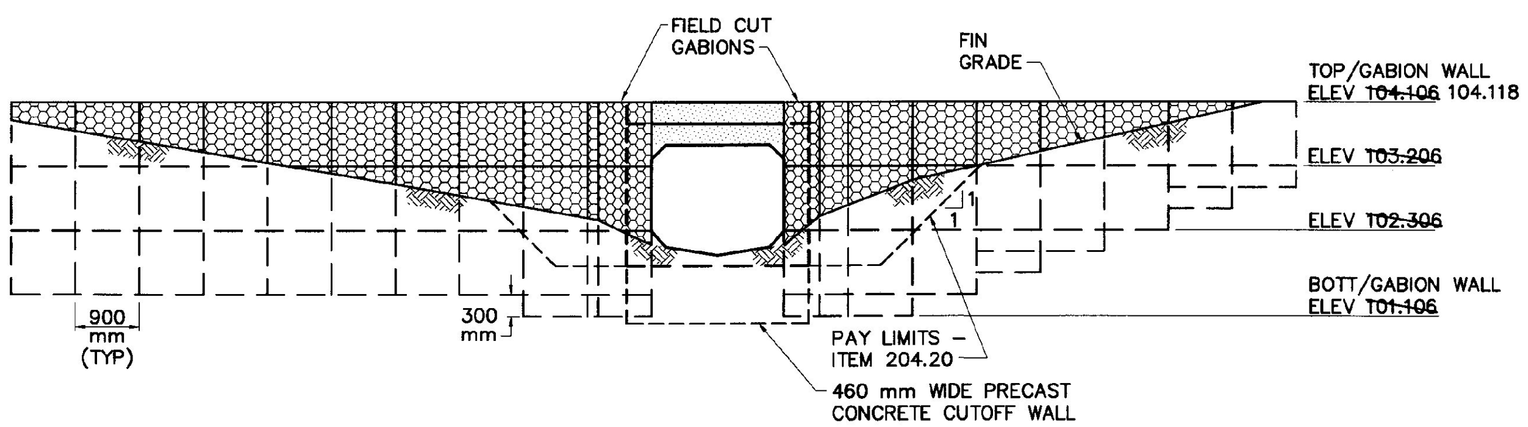

CULVERT/GABION END ELEVATION (OUTLET)

SCALE: 1:60

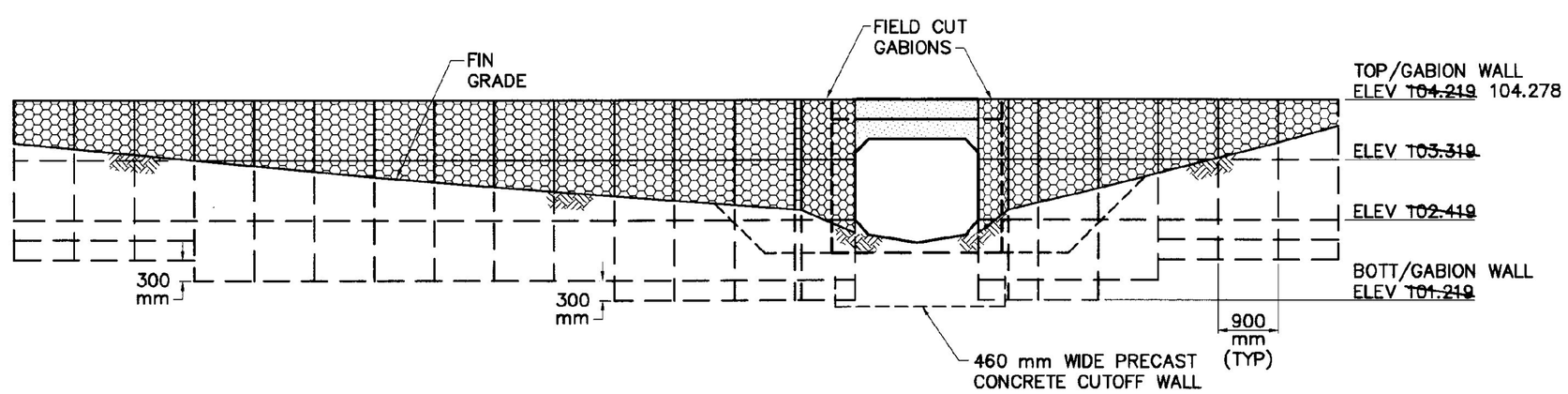

CULVERT/GABION END ELEVATION (INLET)

SCALE: 1:60

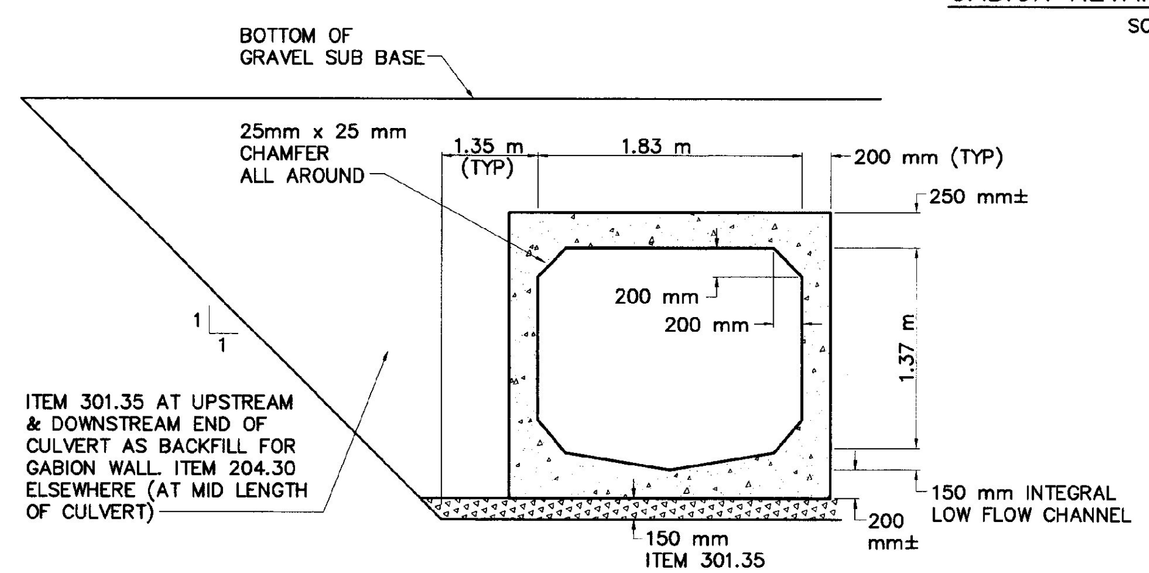

CULVERT CROSS SECTION

NOT TO SCALE

GABION WALL BASIS OF DESIGN

SUBGRADE PHI: 30° MINIMUM (ASSUMED)

FACTORS OF SAFETY:

- OVERTURNING ≥ 2.0
- SLIDING ≥ 1.5
- BEARING ≥ 2.0

UNTI WEIGHT:

- GABION FILL: 1760 kg/m^3
- BACKFILL: 2160 kg/m^3
- SUBGRADE: 1600 kg/m^3

DENSE GRADED CRUSHED STONE BACKFILL CHARACTERISTICS:

- PHI : 40°
- Cu ≥ 4
- 1 ≤ C ≤ 3

LOADINGS TO INCLUDE TRAFFIC SURCHARGE

VAOT Metric

NO.	DATE	REVISIONS	DRWN	CHKD
5	9/30/98	AS-BUILT INFORMATION ADDED	DSM	KAS
4	12/26/96	CONTRACT PLANS	DSM	MPY
3	11/11/96	FINAL REVIEW REVISIONS	DSM	MPY
2	6/4/96	REVISIONS PER REVIEW COMMENTS	DSM	MPY
1	4/8/96	REVISIONS PER REVIEW COMMENTS	DSM	MPY

TIMOTHY D. SMITH & ASSOCIATES, PC ARCHITECTS
OLD RAILROAD STATION NORTH BENNINGTON, VERMONT 05257
802-442-8184 FAX 802-442-5241
WRIGHT ENGINEERING, LTD. CIVIL ENGINEERS
128 MERCHANTS ROW – P.O. BOX 176 RUTLAND, VERMONT 05702-0176
802-775-2511 FAX 802-775-8915

STATE OF VERMONT REGISTERED PROFESSIONAL ENGINEER KEVIN K. SMITH No. 5864

PROJECT NO.IM 091-1 (29)

WATER & SEWER EXTENSION PROJECT

TOWN OF GUILFORD
TOWN OF BRATTLEBORO

SHEET TITLE: BOX CULVERT AND GABION DETAILS

DSGN BY: KAS
DRWN BY: DSM
CHKD BY: KAS
CHKD BY: MPY

STATE OF VERMONT
AGENCY OF TRANSPORTATION
SOUTHEAST VERMONT WELCOME CENTER
GUILFORD, VERMONT

DATE: 1-2-96 SHEET NO. 22 OF 55 SHEETS

C:\ACAD12\950\950122AB Thu Oct 8 15:26:38 1998