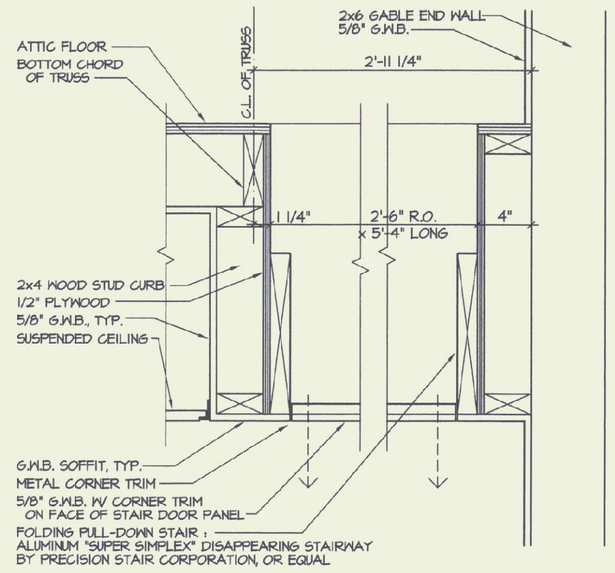

7 PULL-DOWN STAIR
1 1/2" = 1'-0"

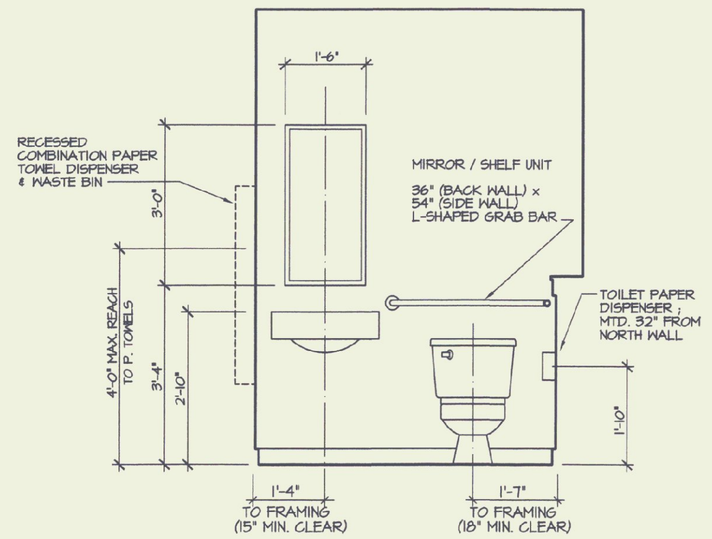

6 STAFF W.C. ELEV.
1/2" = 1'-0"

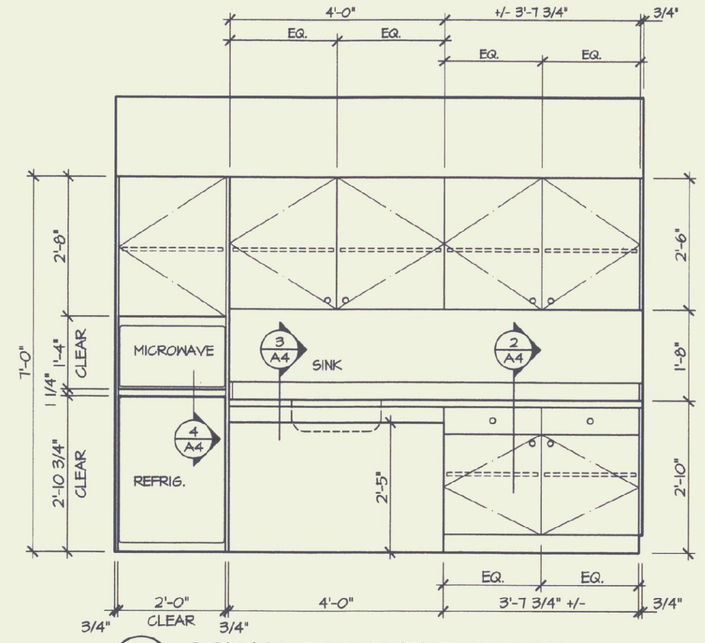

5 BREAK ROOM ELEVATION
1/2" = 1'-0"

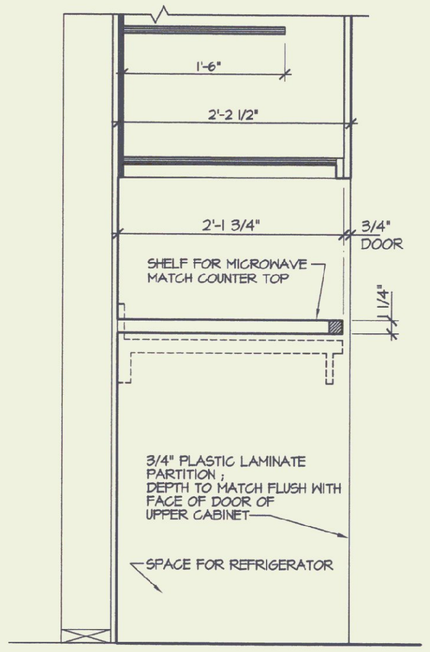

4 SECTION @ REFRIG.
1" = 1'-0"

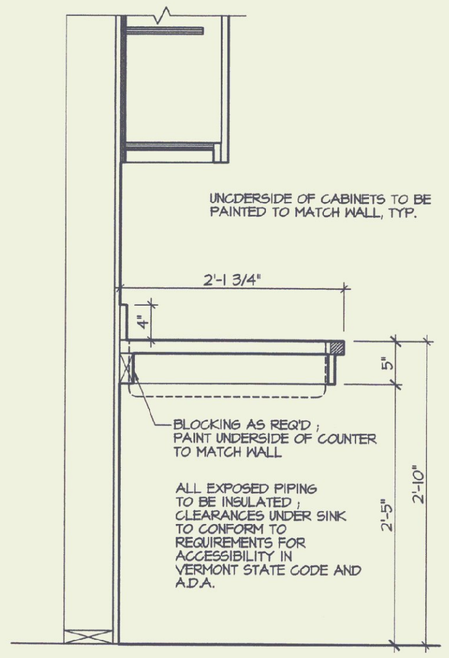

3 SECTION @ SINK
1" = 1'-0"

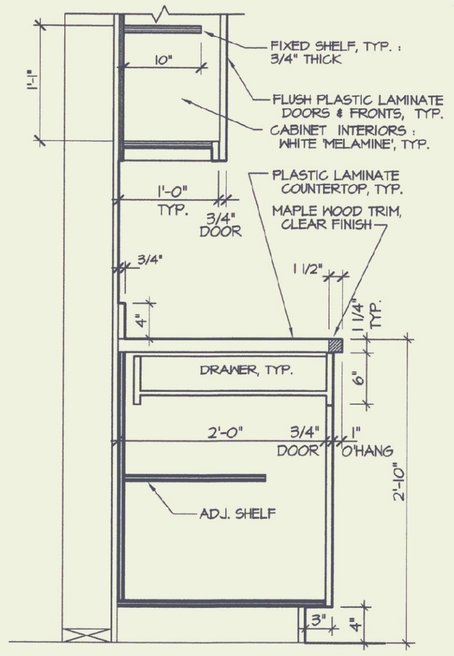

2 CABINET SECTION
1" = 1'-0"

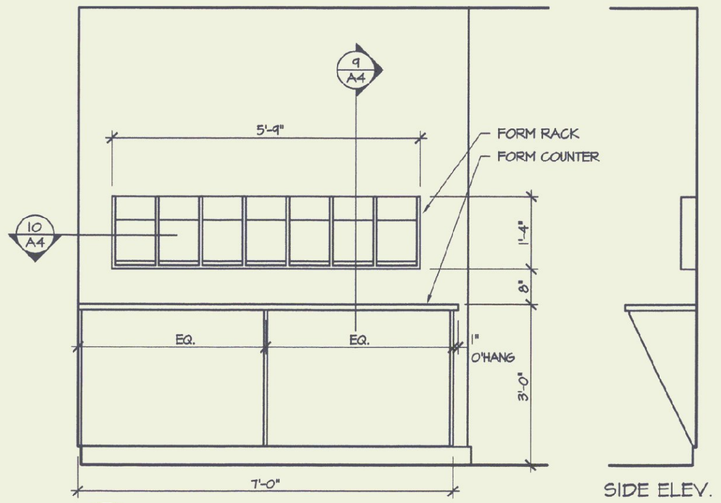

8 ELEVATION @ FORMS COUNTER
1/2" = 1'-0"

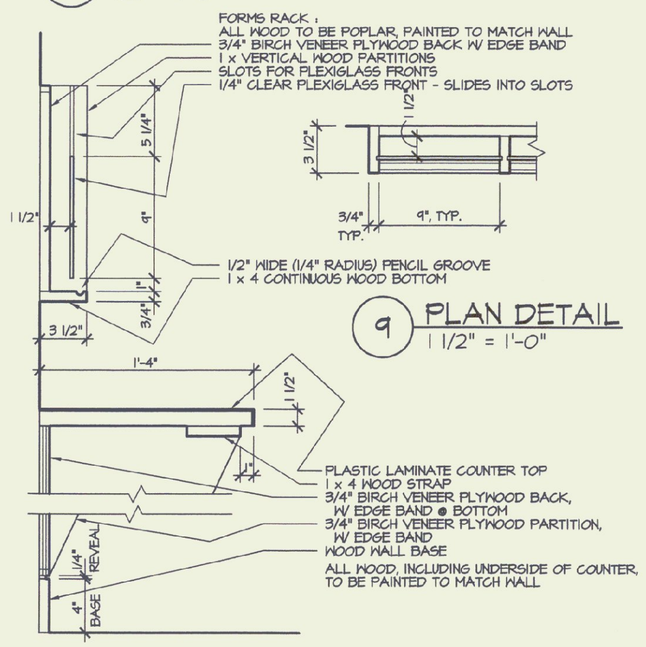

9 PLAN DETAIL
1 1/2" = 1'-0"

9 DETAIL @ FORMS COUNTER
1 1/2" = 1'-0"

LEGEND

- EXISTING 2x4 FIXTURE TO BE REMOVED OR MOVED TO NEW LOCATION
- EXISTING 2x4 FIXTURE LOCATION ; SEE DWG. E1 FOR FIXTURES TO BE REPLACED
- NEW 2x4 FIXTURE LOCATION
- NEW STRIP LIGHT FIXTURE
- EXISTING RECESSED DOWNLIGHT
- NEW RECESSED DOWNLIGHT
- CEILING MTD. EXIT LIGHT
- CEILING MTD. EXIT & EMERGENCY LIGHT
- SUPPLY AIR DIFFUSER
- RETURN OR EXHAUST AIR REGISTER
- EXISTING EXHAUST REGISTER

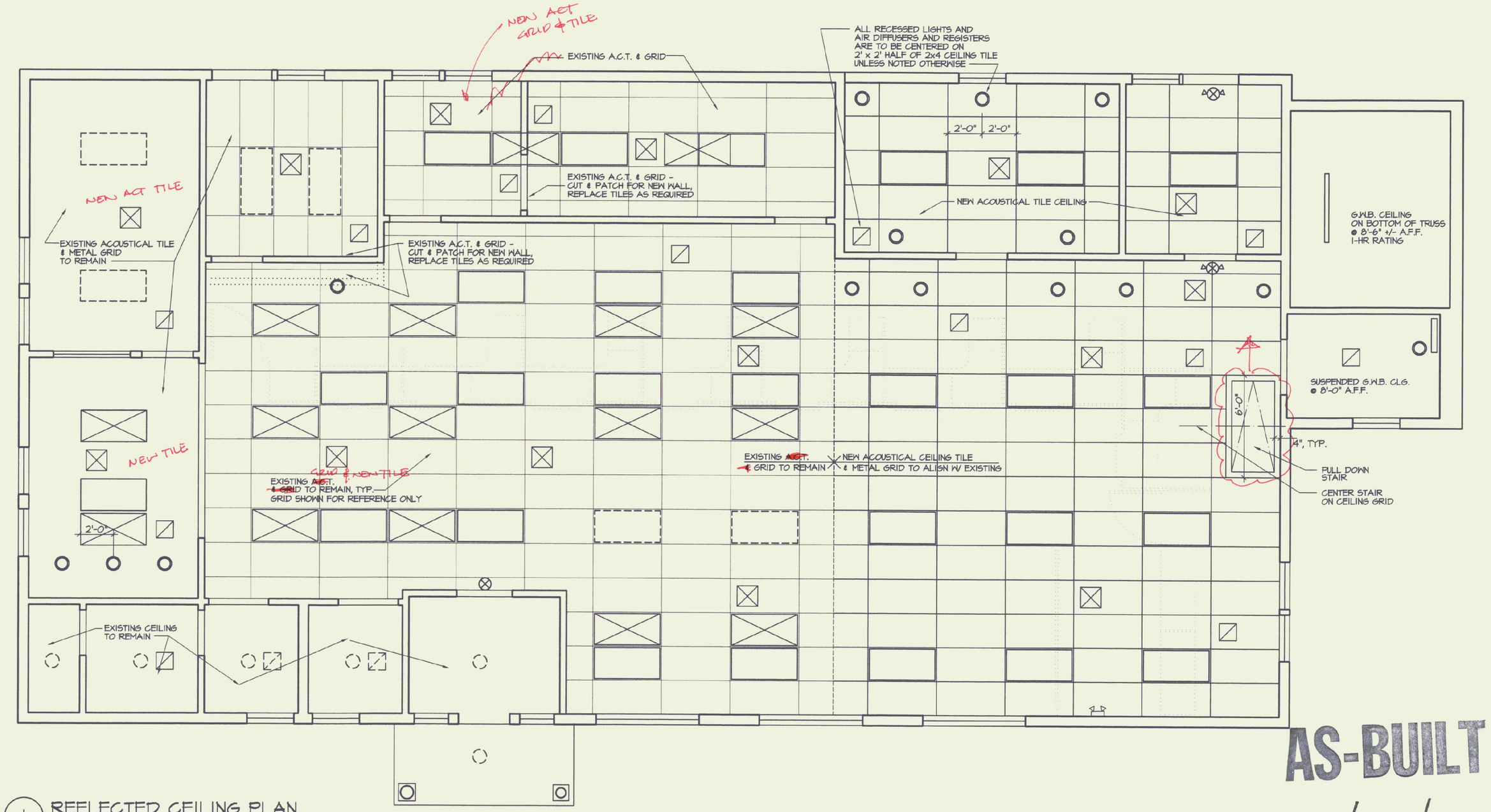

1 REFLECTED CEILING PLAN
1/4" = 1'-0"

AS-BUILT
/ /

ERTEL ASSOCIATES ARCHITECTS
15 CENTRAL STREET WOODSTOCK, VERMONT 05091

DEPARTMENT OF MOTOR VEHICLES

RUTLAND, VERMONT

REFLECTED CEILING PLAN, INTERIOR ELEVATIONS & DETAILS

N ACT. N NOM.

JOB #:
CADD #: DMV/A2-1
BY: SPM/CAD

SCALE : AS NOTED
DATE: MAY 2000
REVISIONS:

A4