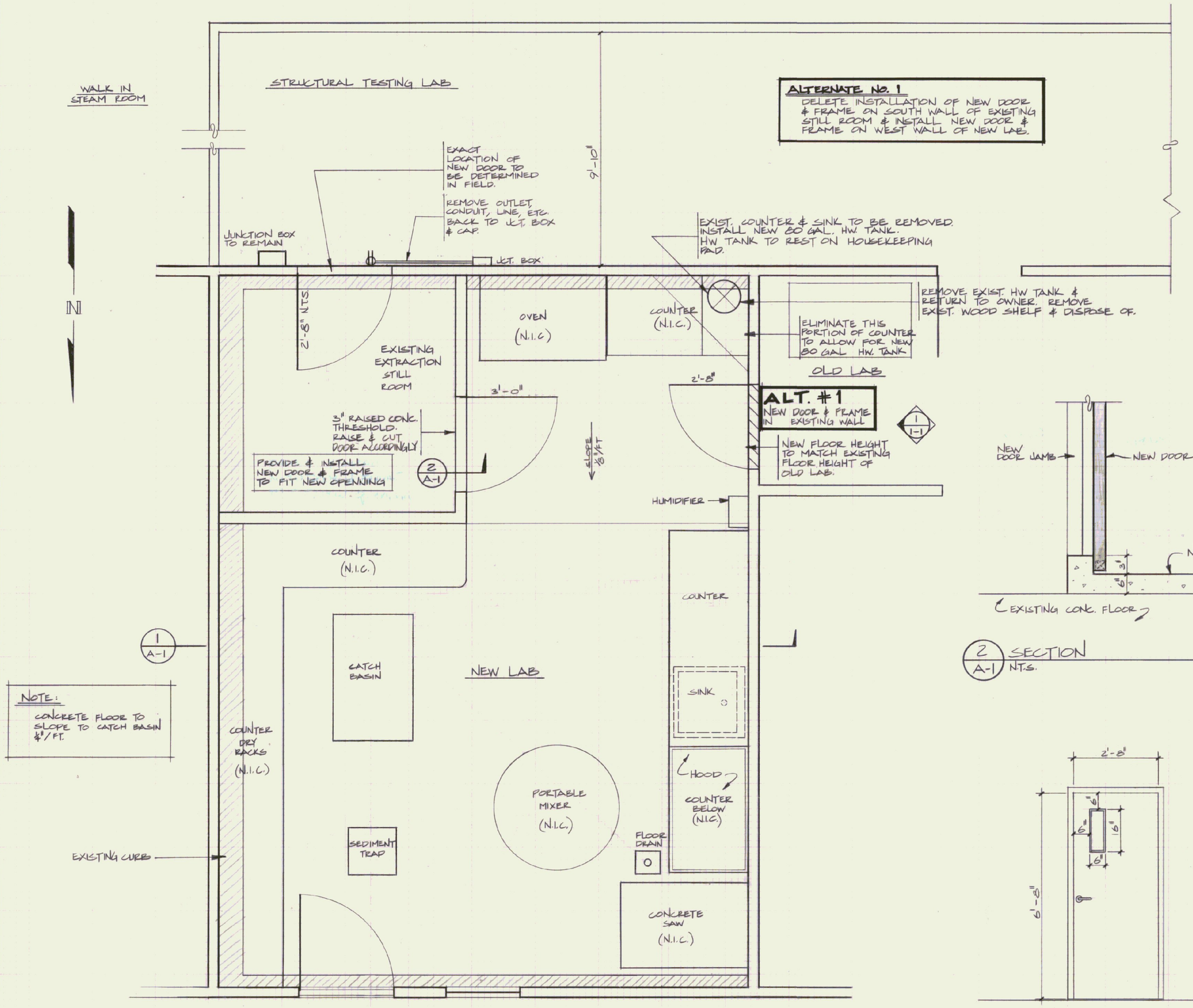

NOTE:
CONCRETE FLOOR TO SLOPE TO CATCH BASIN 1/8"/FT.

FLOOR PLAN
SCALE: 1/2" = 1'-0"

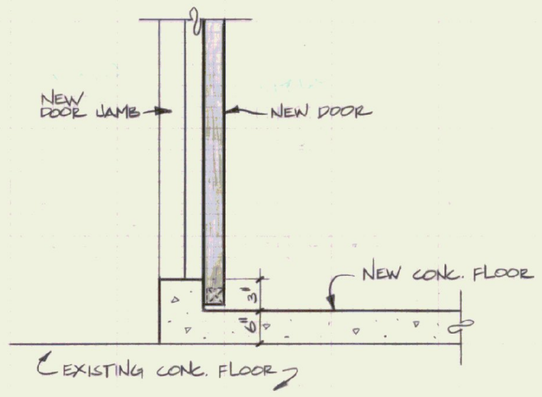

2 / A-1 SECTION
N.T.S.

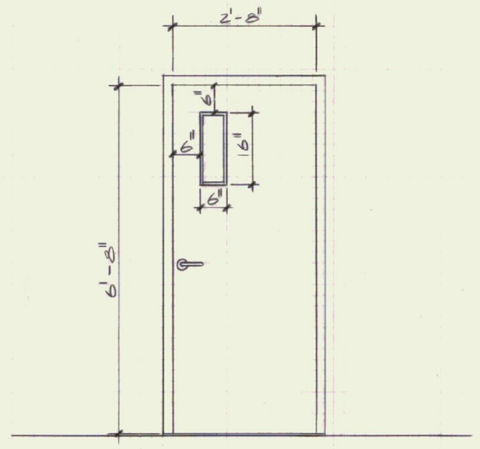

1 / 1-1 DOOR ELEVATION
SCALE: 1/2" = 1'-0"

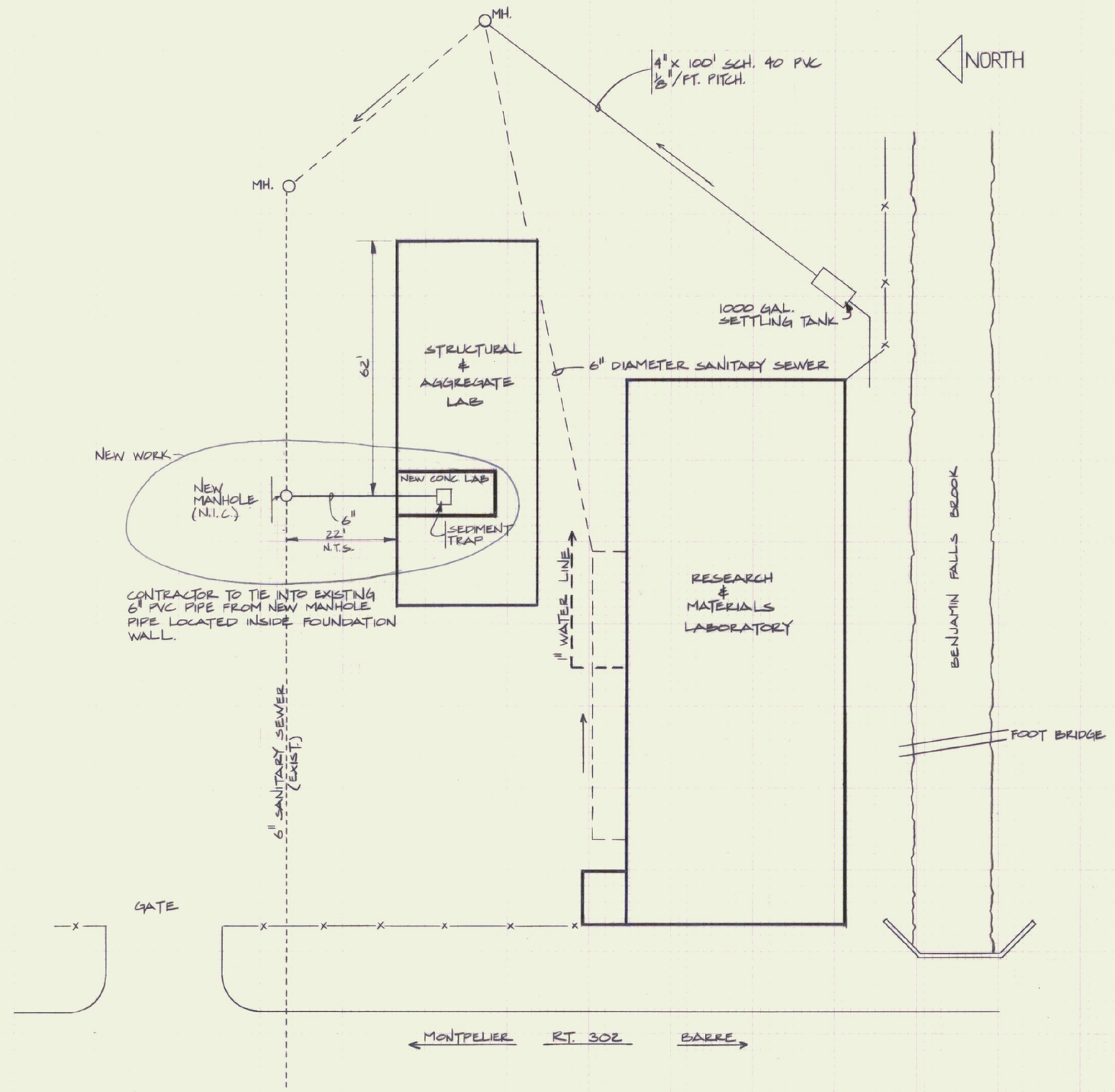

SITE PLAN/ UTILITY PLAN
SCALE: 1" = 20'-0"

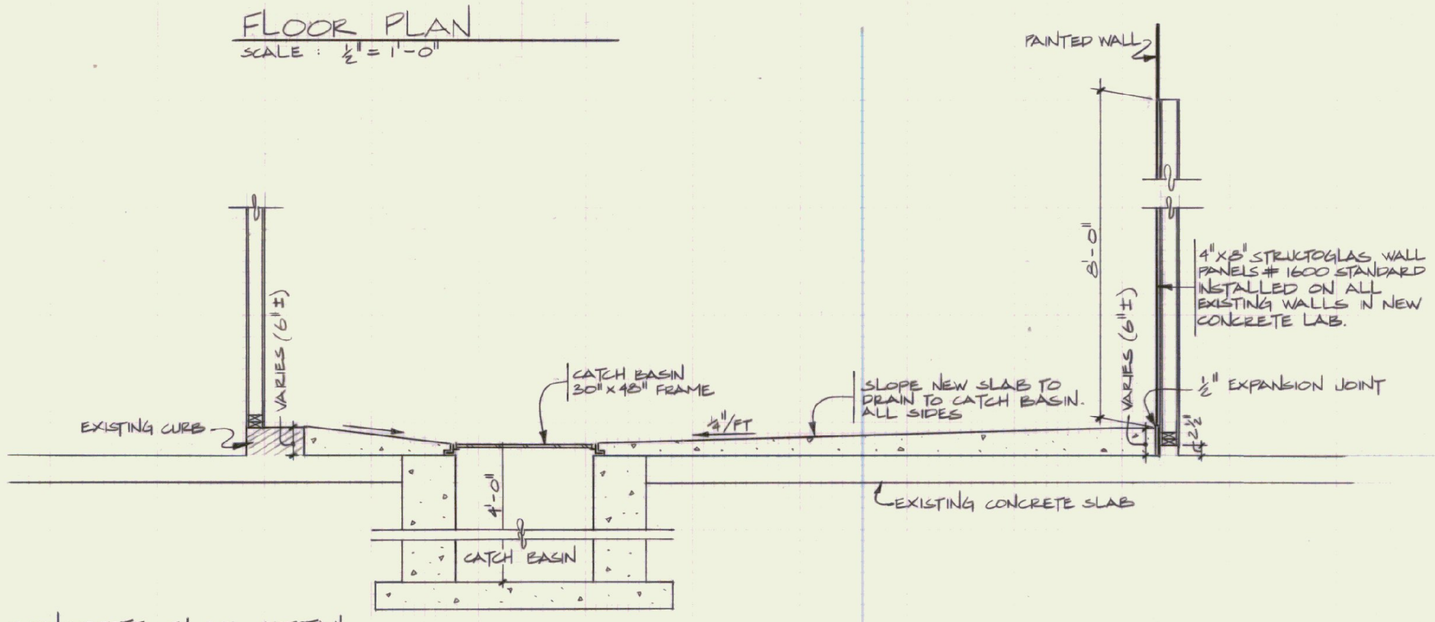

1 / A-1 CONCRETE SLAB DETAIL
SCALE: 1/2" = 1'-0"

DOOR SCHEDULE

#	SIZE	MATERIAL DOOR	MATERIAL FRAME	FIRE RATING DOOR	FIRE RATING FRAME	LOCKSET KEYSIDE	LOCKSET FINISH	LOCKSET MFG	LOCKSET NUMBER	HINGES SIZE	HINGES FINISH	HINGES MFG	HINGES NUMBER	CLOSER MFG	CLOSER NUMBER	REMARKS
1	3'-0" x 6'-8" x 1 3/4"	G.S.	G.S.	1 1/2 HR	1 1/2 HR	OLD LAB	US26D	FALCON	LM561DN26D	4 1/2" x 4 1/2"	STAINLESS	STANLEY	FBB191	STANLEY	1250	LOCKSET TO HAVE 7 PIN INTERCHANGABLE CORE
2	3'-0" x 6'-2" x 1 3/4"	G.S.	G.S.	1 1/2 HR	1 1/2 HR	OLD LAB	US26D	FALCON	LM561DN26D	4 1/2" x 4 1/2"	STAINLESS	STANLEY	FBB191	STANLEY	1250	

NOTES:

1) DOORS & FRAMES TO BE 16 GA. GALV. STL. BONDERIZED AND FINISHED W/ BAKED ON COAT OF RUST INHIBITING METALLIC OXIDE, ZINC - CHROMATE, OR SYNTHETIC RESIN PRIMER.
2) GLAZING IN DOORS TO BE INSULATING SAFETY GLASS 5/8" THICK.
3) DOOR TO HAVE 1/2" HIGH THRESHOLD SADDLE (NATL' GRD 413 ALU)
4) CONTRACTOR SHALL VERIFY ALL OPENNINGS & SIZES BEFORE ORDERING DOORS & FRAMES.
5) ALL PATCHES TO MATCH EXISTING SURFACES OR BETTER.
6) CONTRACTOR TO PROVIDE DUST CONTROL FOR ALL EQUIPMENT & FURNITURE, ETC. DURING DEMOLITION & INSTALLATION OF NEW WORK.
7) DOORS TO HAVE WEATHER STRIPPING ON ALL SIDES (NATL' GRD 170A, ALU, AS WELL AS DOOR SWEEP - NATL' GRD D608)

STATE OF VERMONT
DEPARTMENT OF STATE BUILDINGS
AGENCY OF ADMINISTRATION
MONTPELIER. VERMONT

AGENCY OF TRANSPORTATION
CONCRETE TESTING LAB
BARRE - MONTPELIER ROAD
SITE PLAN & FLOOR PLAN
BERLIN, VERMONT

DATE: APRIL 1993	SCALE: AS NOTED	REVISIONS:	DWG. NO. A-1
DRAWN BY: J. GIBBS	APPROVED BY:		1 OF 3