PANEL PB CIRCUIT BREAKER TYPE NQOB — 225 AMP M.L.O. — CONN. LOAD: KVA
120/208 VAC, 3 PHASE, 4 WIRE, SN , GRD BUS — 10K A.I.C. — SURFACE MOUNT

No.	POLES	AMPS	KVA	EQUIPMENT	CONDL	WIRE	#	No.	POLES	AMPS	KVA	EQUIPMENT	CONDL	WIRE
1	1	20		EXISTING EQUIP.			A	2	1	20		EXISTING EQUIP.		
3							B	4						
5							C	6						
7							A	8						
9							B	10						
11							C	12						
13							A	14						
15	2	20		EXISTING EQUIP.			B	16						
17							C	18	2	15		EXISTING EQUIP.		
19	1	20		SPARE			A	20						
21							B	22	1	20	1.8	LIGHTING SOILS LAB	1/2"	2#12,#12G
23							C	24				SPARE		
25							A	26						
27							B	28						
29							C	30						
31							A	32						
33							B	34						
35							C	36						
37							A	38						
39							B	40						
41							C	42						

PANEL PC CIRCUIT BREAKER TYPE NQOB — 225 AMP M.L.O. — CONN. LOAD: 19.8 KVA
120/208 VAC, 3 PHASE, 4 WIRE, SN , GRD BUS — 10K A.I.C. — FLUSH MOUNT

No.	POLES	AMPS	KVA	EQUIPMENT	CONDL	WIRE	#	No.	POLES	AMPS	KVA	EQUIPMENT	CONDL	WIRE
1	1	20	1.3	LTG. CORRIDOR	1/2"	2#12,#12G	A	2	1	20	1.6	LTG. LAB	1/2"	2#12,#12G
3			1.6	LTG. OFFICES			B	4			1.1	LTG. OFFICES		
5			1.0	RECEPT. OFFICES			C	6			1.8	RECEPT. LAB		
7			1.0				A	8			.8			
9			.8				B	10			.8			
11			.8				C	12			.6			
13			1.2				A	14			.8			
15			.2				B	16			.8			
17			.4	WATER COOLER			C	18			1.0			
19				AUTOCLAVE (38)			A	20			.8			
21	2	20		MOISTURE CAB. (35)			B	22			1.0			
23							C	24			.8	COPIER		
25	1	20		COMPRESSOR (82)			A	26						
27							B	28						
29							C	30						
31							A	32						
33							B	34						
35							C	36						
37							A	38						
39							B	40						
41							C	42						

PANEL PD CIRCUIT BREAKER TYPE NQOB (2 SECTION) — 225 AMP M.L.O. — CONN. LOAD: 56.7 KVA
120/208 VAC, 3 PHASE, 4 WIRE, SN , GRD BUS — 10K A.I.C. — FLUSH MOUNT

No.	POLES	AMPS	KVA	EQUIPMENT	CONDL	WIRE	#	No.	POLES	AMPS	KVA	EQUIPMENT	CONDL	WIRE
1	1	20	1.2	LTG. OFFICES	1/2"	2#12,#12G	A	2	1	20	1.2	LTG. LAB	1/2"	2#12,#12G
3			.8	LTG. OFFICES			B	4			.8			
5			.8	RECEPT.			C	6			1.2			
7			1.2				A	8			.8	RECEPT.		
9			1.2				B	10			1.3	HOT PLATE (108)		
11			1.2				C	12			.8	RECEPT.		
13			.8				A	14			1.1	TUBE EXTRACT. (72)		
15			1.2				B	16			.8	VAC. PUMP (73)		
17			1.2				C	18			1.8	OVEN (109)		
19			1.2				A	20			.8	COMPACTOR (110)		
21			.3	RO-TAP (111)			B	22			.5	HOOD (87)		
23	2	40	6.0	OVEN	3/4"	2#8,1#10G	C	24			.5	HOOD (88)		
25							A	26	2	40	6.6	THAW CAB. (115)	3/4"	2#8,1#10G
27	2	40	6.0	OVEN (92)	3/4"	2#8,1#10G	B	28						
29							C	30	1	20	1.2	RECEPT.	1/2"	2#12,#12G
31	1	20	1.2	RECEPT.	1/2"	2#12,#12G	A	32			.8			
33			1.2	MIXER (106)			B	34			1.2			
35			1.5	FURNACE (93)			C	36			.4			
37			.7	HOT PLATE (108)			A	38			1.5	WATER BATH		
39			.6	RO-TAP (104)			B	40			.8	RECEPT.		
41			1.5	EXTRACTOR (89)			C	42	1	30	2.1	OVEN (90)		
43			1.5	EXTRACTOR (89)			A	44	1	20		SPARE		
45			.2	ROOF RECEPT.			B	46						
47				SPARE			C	48						
49							A	50						
51							B	52				SPACE		
53				SPACE			C	54						
55							A	56						
57							B	58						
59							C	60						
61							A	62						
63							B	64						
65							C	66						
67							A	68						
69							B	70						
71							C	72						

PANEL PE CIRCUIT BREAKER TYPE NQOB — 225 AMP M.L.O. — CONN. LOAD: 23.5 KVA
120/208 VAC, 3 PHASE, 4 WIRE, SN , GRD BUS — 10K A.I.C. — FLUSH MOUNT

No.	POLES	AMPS	KVA	EQUIPMENT	CONDL	WIRE	#	No.	POLES	AMPS	KVA	EQUIPMENT	CONDL	WIRE
1		50	1.8	EXIST. A/C UNIT	1"	3#6,1#10G	A	2		50	1.8	EXIST. A/C UNIT	1"	3#6,1#10G
3	3	—					B	4	3	—				
5		—					C	6		—				
7		20	1.4	UNIT (A) 1 HP	1/2"	3#12,1#12G	A	8		50	8.7	UNIT (B) 7.5 HP	1"	3#6,1#10G
9	3	—					B	10	3	—				
11		—					C	12		—				
13		20	.8	UNIT (C) 1/2 HP	1/2"	3#12,1#12G	A	14		20	3.8	UNIT (D) 3 HP	1/2"	3#12,1#12G
15	3	—					B	16	3	—				
17		—					C	18		—				
19		20	3.8	UNIT (E) 3 HP	1/2"	3#12,1#12G	A	20		20	1.4	UNIT (F) 1 HP	1/2"	3#12,1#12G
21	3	—					B	22	3	—				
23		—					C	24		—				
25				SPACE			A	26				SPACE		
27							B	28						
29							C	30						
31							A	32						
33							B	34						
35							C	36						
37							A	38						
39							B	40						
41							C	42						

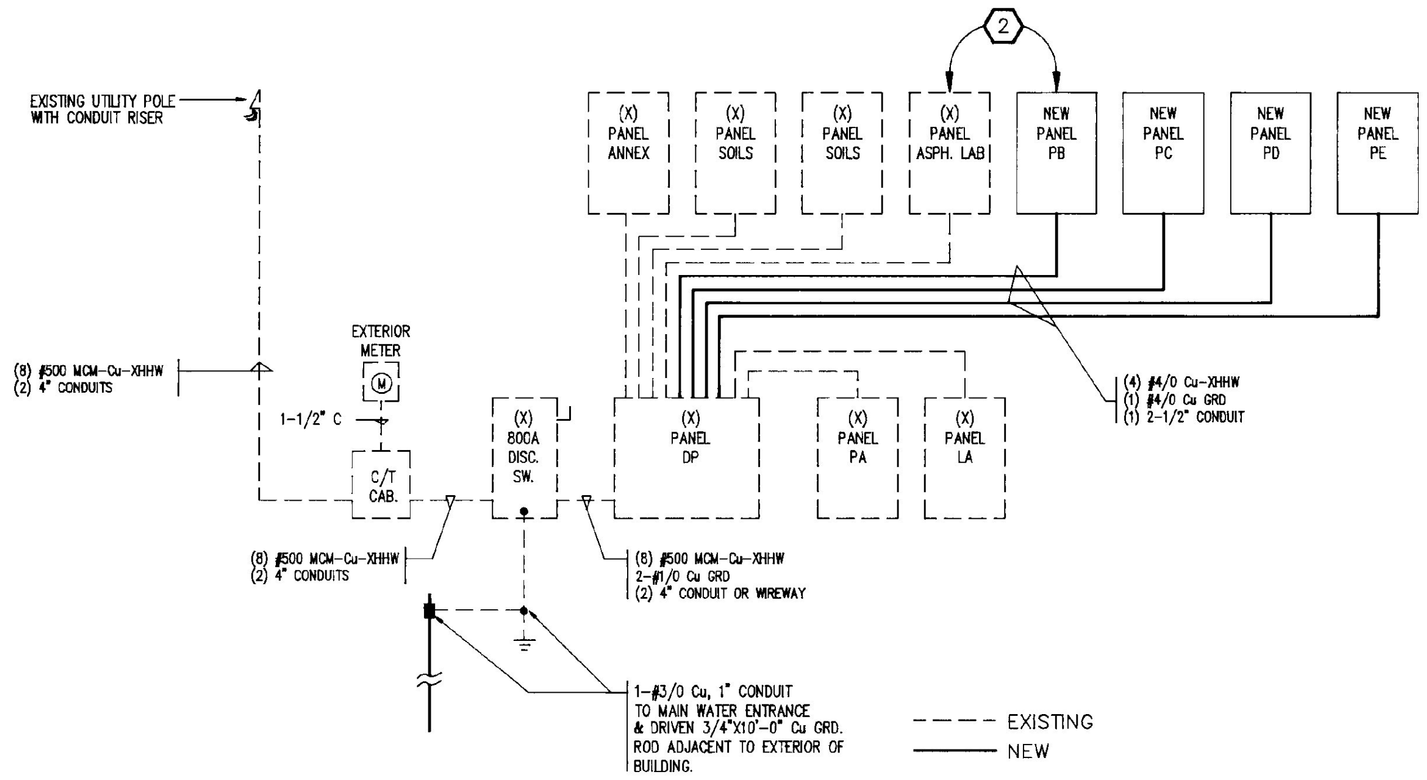

SINGLE LINE WIRING DIAGRAM

120/208 VAC 3Ø 4 WIRE

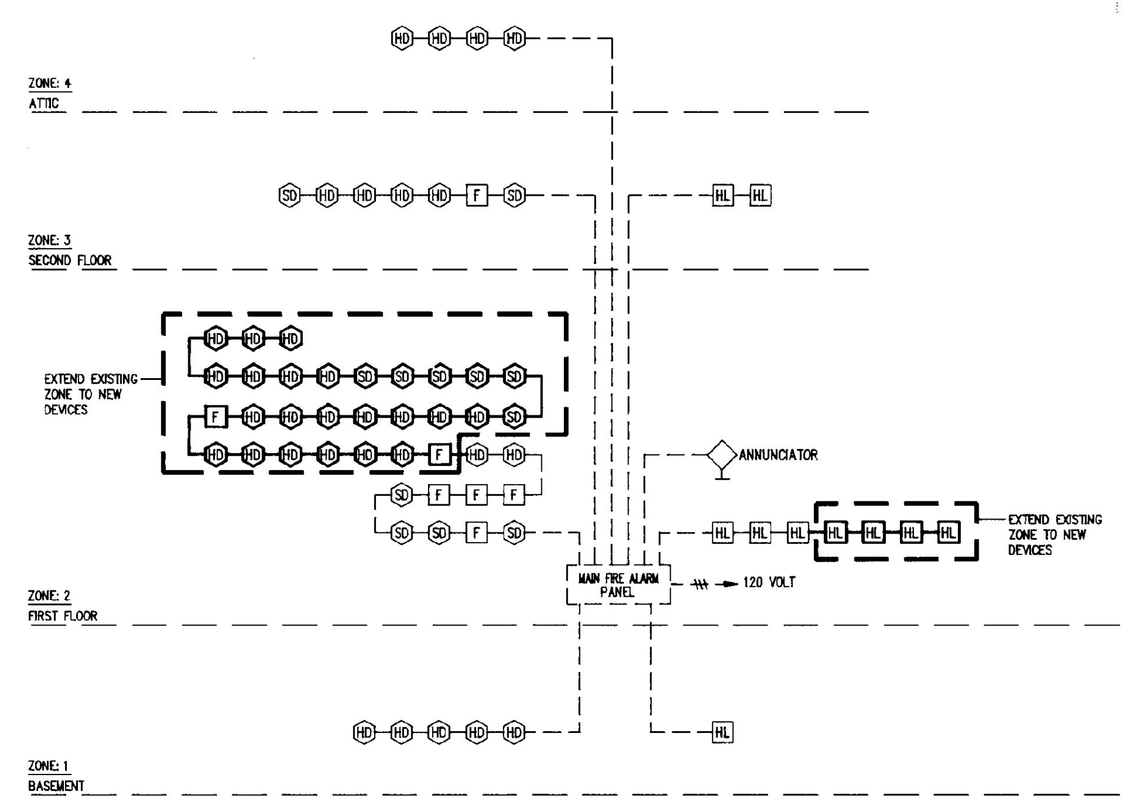

FIRE ALARM RISER DIAGRAM

N.T.S.

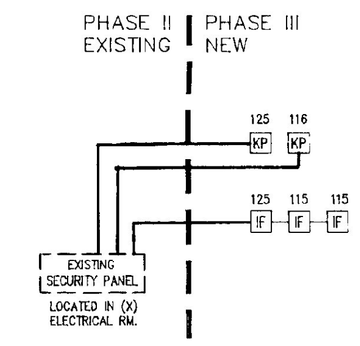

SECURITY SYSTEM RISER DIAGRAM

N.T.S.

LEGEND

- FLUORESCENT FIXTURE, LETTER DENOTES TYPE, E/L DENOTES EMERGENCY LIGHT.
- FLUORESCENT FIXTURE, INDUSTRIAL TYPE, LETTER DENOTES TYPE
- FLUORESCENT STRIP FIXTURE, LETTER DENOTES TYPE. , LETTER DENOTES TYPE
- (B) INCANDESCENT/FLUORESCENT OR H.I.D. FIXTURE, RECESSED LETTER DENOTES TYPE
- INCANDESCENT OR FLUORESCENT FIXTURE, SURFACE MTD. , LETTER DENOTES TYPE
- INCANDESCENT, FLUORESCENT/ OR H.I.D. FIXTURE, WALL MTD.
- (E) EMERGENCY LIGHT, LETTER DENOTES TYPE
- EXIT/EMERGENCY FIXTURE, CEILING MTD., LETTER DENOTES TYPE.
- EXIT/EMERGENCY FIXTURE, WALL MTD., LETTER DENOTES TYPE.
- $ SWITCH, SINGLE POLE, LEVITON #1221-I, 20A, GROUNDING, MOUNT BOTTOM 44" A.F.F.
- $3 SWITCH, THREE-WAY, LEVITON #1223-I, 20A, GROUNDING, MOUNT BOTTOM 44" A.F.F.
- $D SWITCH, DIMMER, LEVITON #60800-I, 120V, 800 WATT MOUNT BOTTOM 44" A.F.F.
- $M MANUAL MOTOR STARTING SWITCH W/THERMAL O.L. MTD. AT UNIT (MAINTENANCE SWITCH)
- DUPLEX RECEPT., LEVITON #5362-I, 20A, 125V, MOUNT BOTTOM 18" A.F.F.
- DUPLEX RECEPT., LEVITON #5362-I 20A, 125V, MOUNT HORIZONTALLY ABOVE COUNTER HEIGHT. (UNLESS OTHERWISE NOTED)
- DUPLEX RECEPT. W/G.F.I. PROTECTION, LEVITON #6398-I, MOUNT HORIZONTALLY ABOVE COUNTER HEIGHT (UNLESS OTHERWISE NOTED)
- WP DUPLEX RECEPT. W/G.F.I. PROTECTION, LEVITON #6898-I, W/#6196V W.P. COVER MOUNT BOTTOM 18" A.F.F. (UNLESS OTHERWISE NOTED)
- EWC DUPLEX RECEPT. W/G.F.I. PROTECTION, LEVITON #6398-I EWC – DENOTES ELECTRIC WATER COOLER
- CW DUPLEX RECEPT., LEVITON #5362-I, 20A, 125V, MOUNT IN CASEWORK VERIFY EXACT MTG, HEIGHT AND LOCATION WITH CASEWORK SHOP DRAWINGS
- 20 SPECIAL RECEPT., NUMBER DENOTES RECEPT TYPE , MATCH EQUIP. PLUG.
- WIREMOLD #G-4000 WIREWAY WITH DIVIDER. PROVIDE DUPLEX RECEPT. TEL OUTLETS & COMPUTER OUTLETS AS SHOWN ON PLANS. MOUNT 16" A.F.F. UNLESS OTHERWISE NOTED
- WIREMOLD #2100 WIREWAY WITH SINGLE RECEPT. AT 24" O.C. MOUNT ABOVE COUNTER OR BACK SPLASH AS REQ'D.
- PEDESTAL WITH TWO DUPLEX RECEPT. WALKER #513 GFI MOUNT IN COUNTER TOP AS SHOWN.
- R RELAY
- J JUNCTION BOX
- EX EXPLOSION PROOF JUNCTION BOX, RATED FOR CLASS 1, DIV. 1, GROUP D
- DISCONNECTING MEANS, W.P. DENOTES WEATHER PROOF
- MOTOR CONTROLLER
- MOTOR
- T TRANSFORMER
- PANELBOARD FLUSH MTD. EXTEND 3-1" EMPTY CONDUITS TO ACCESSIBLE CLG. SPACE
- PANELBOARD, SURFACE MTD.
- HOMERUN TO PANELBOARD, (/) DENOTES WIRE COUNT
- TELEPHONE OUTLET , MOUNT BOTTOM AT 16" A.F.F. 3/4" CONDUIT TO ACCESSIBLE CEILING SPACE
- COMPUTER OUTLET , MOUNT BOTTOM AT 16" A.F.F. UNLESS OTHERWISE NOTED. 3/4" CONDUIT TO ACCESSIBLE CEILING SPACE
- F MANUAL FIRE ALARM PULL STATION, MOUNT BOTTOM 44" A.F.F.
- HL FIRE ALARM HORN & LIGHT, MOUNT BOTTOM 6'-8" A.F.F.
- SD SMOKE DETECTOR
- HD HEAT DETECTOR
- DD DUCT DETECTOR
- R FAN SHUT DOWN RELAY
- IF INFRARED DETECTOR
- KP KEY PAD
- (X) EXISTING

STATE OF VERMONT — ROBERT J. WOLBACH — REGISTERED PROFESSIONAL ENGINEER

Wolbach Engineering, Inc.
Consulting Engineers
20 Kimball Ave, Suite 102, S. Burlington, VT 05403
(802) 658-4044

State of Vermont
Department of State Buildings
John Zampieri, Commissioner

Materials & Research Laboratory
Berlin, Vt.

PHASE III

Janson Design, Inc.
FRED KEIL, ARCHITECT
P.O. BOX 55 – BOLTON ROAD, WATERBURY, VT 05676
(802) 244-5800

PHASE III FLOOR PLAN

SINGLE LINE & PANEL SCHEDULES

STATE HIGHWAY LAB

DATE: 1-10-91

DWG. NO. E-9