List of Drawings:

S-1 Site Plan
P-1 Plumbing Plan

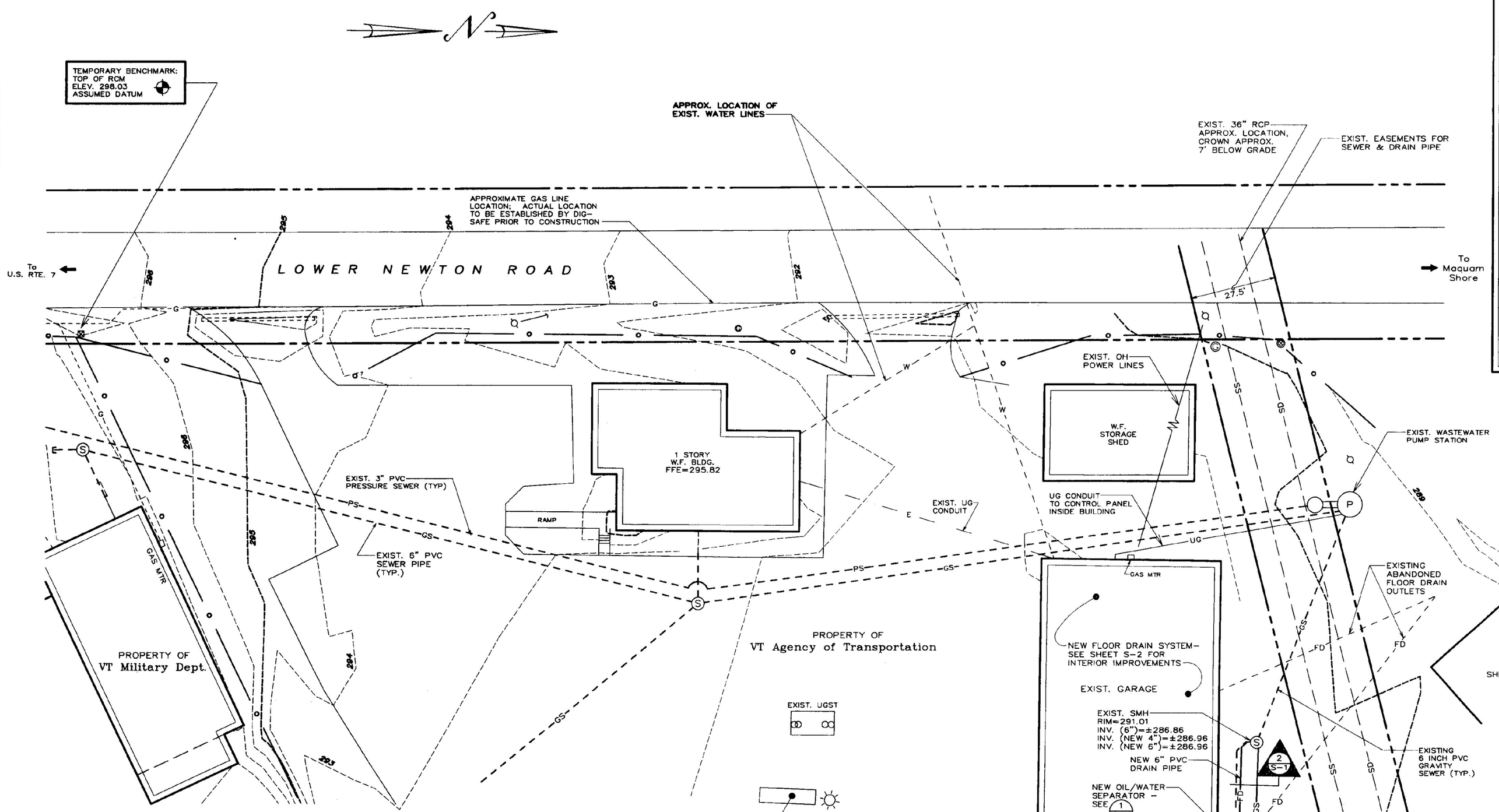

Site Plan

SCALE: 1"=20'
CONTOUR INTERVAL = 1 FOOT

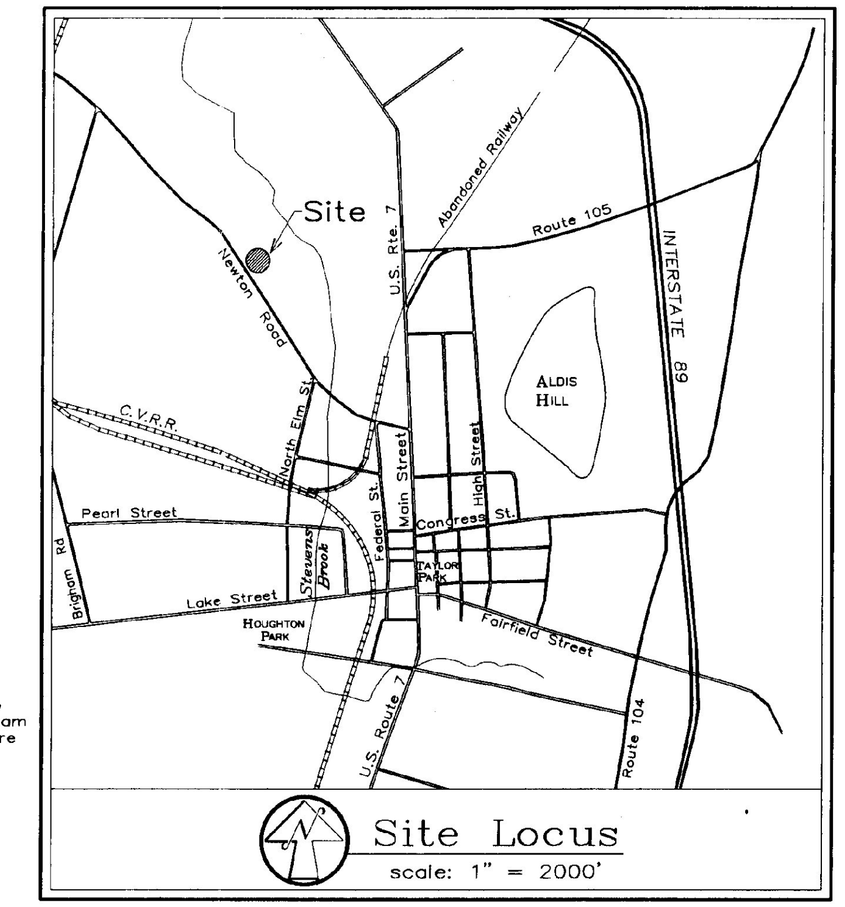

Site Locus

scale: 1" = 2000'

LEGEND

	EXISTING IRON PIN
	EXISTING GAS VALVE
	EXISTING SIGN
	EXISTING UTILITY POLE
	EXISTING CATCH BASIN
	EXISTING OR PROPOSED SEWER MANHOLE (SMH) - AS NOTED
	EXIST. PUMP STATION & VALVE COMPARTMENT
	EXISTING WOODEN FENCE
	EXISTING CHAIN LINK FENCE
SD	EXISTING STORM DRAIN
321	EXISTING CONTOUR
	APPROXIMATE RIGHT-OF-WAY (R.O.W.) LIMIT
PS	PROPOSED PRESSURE SEWER
SS	EXISTING GRAVITY SEWER
GS	PROPOSED GRAVITY SEWER
E	EXISTING ELEC. POWER
UG	EXISTING UNDERGROUND CONDUIT
G	EXISTING NATURAL GAS LINE
W	EXISTING WATER LINE
FD	PROPOSED FLOOR DRAIN LINE
FD	EXISTING FLOOR DRAIN LINE

Notes

1. The contractor shall be responsible for verifying and determining the location of all existing utilities shown or not shown on this plan prior to the start of construction. The Engineer shall be notified, in writing, of any utilities found interfering with the proposed construction and appropriate remedial action shall be taken before proceeding with the work. The contractor shall verify all dimensions and elevations in the field before commencing construction and notify the engineer, in writing, of any discrepancy found.
2. The contractor shall be responsible for contacting Dig Safe (1-888-344-7233) prior to excavation.
3. Pursuant to the State access to public records statute V.S.A. 1, Chapter 5, Subchapter 3, I hereby autorize any person to inspect or copy this document or record as may be necessary to comply with the laws and regulations of the State of Vermont.

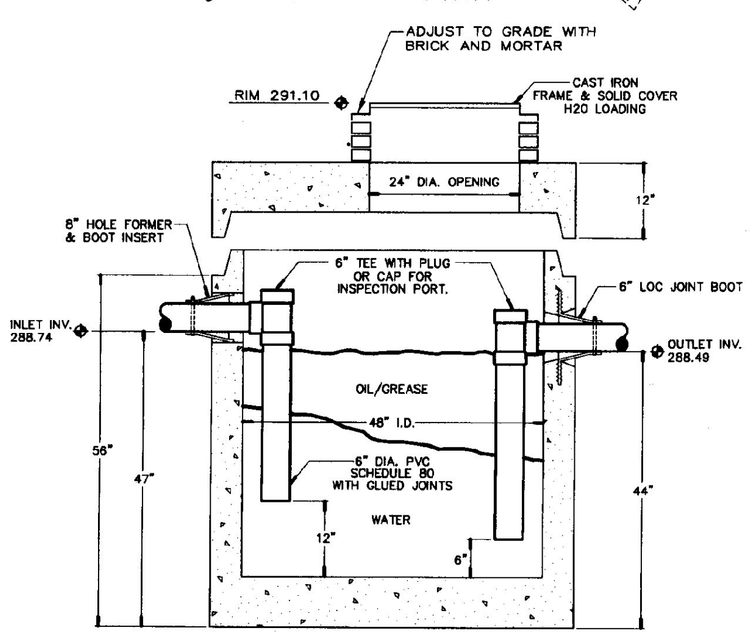

1/S-1 OIL/GREASE SEPARATOR

NOT TO SCALE

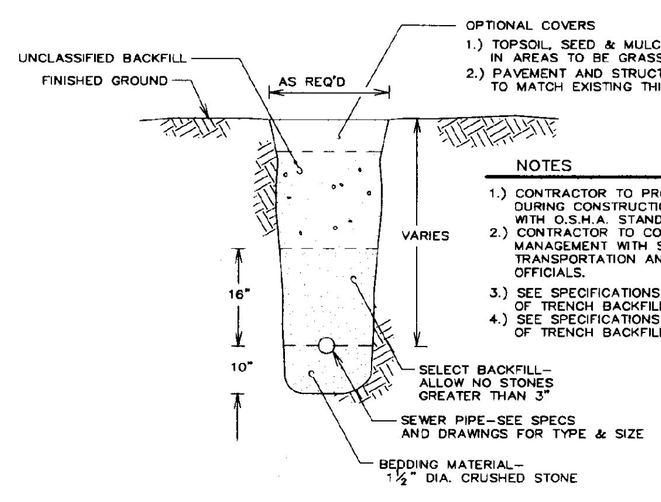

NOTES

1.) CONTRACTOR TO PROVIDE SHORING DURING CONSTRUCTION IN CONFORMANCE WITH O.S.H.A. STANDARDS.
2.) CONTRACTOR TO COORDINATE TRAFFIC MANAGEMENT WITH STATE AND LOCAL TRANSPORTATION AND PUBLIC SAFETY OFFICIALS.
3.) SEE SPECIFICATIONS REGARDING SURCHARGING OF TRENCH BACKFILL IN GRASSED AREAS.
4.) SEE SPECIFICATIONS REGARDING COMPACTION OF TRENCH BACKFILL IN PAVED AREAS.

2/S-1 TYPICAL GRAVITY SEWER TRENCH

NOT TO SCALE

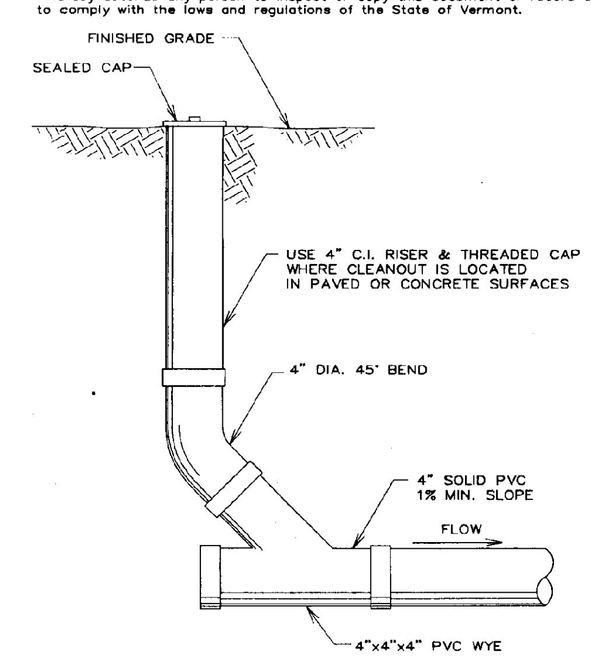

3/S-1 SEWER CLEANOUT

NOT TO SCALE

PROJECT: 97054.1
DATE: 10/5/00
DESIGN: CRC
DRAWN: CRC
CHECKED: PHC
APPROVED: PHC
SCALE: 1" = 20'

Tel. 802-524-2113
Fax. 802-524-6683
CROSS CONSULTING ENGINEERS, P.C.
228 North Main Street
St. Albans, Vermont 05478

© COPYRIGHT 2000
Cross Consulting Engineers, P.C.

Site Plan

VT Agency of Transportation
DISTRICT 8 GARAGE - ST. ALBANS, VERMONT
New Restroom & Drain System
LOWER NEWTON ROAD ~ ST. ALBANS, VERMONT

SITE
S-1