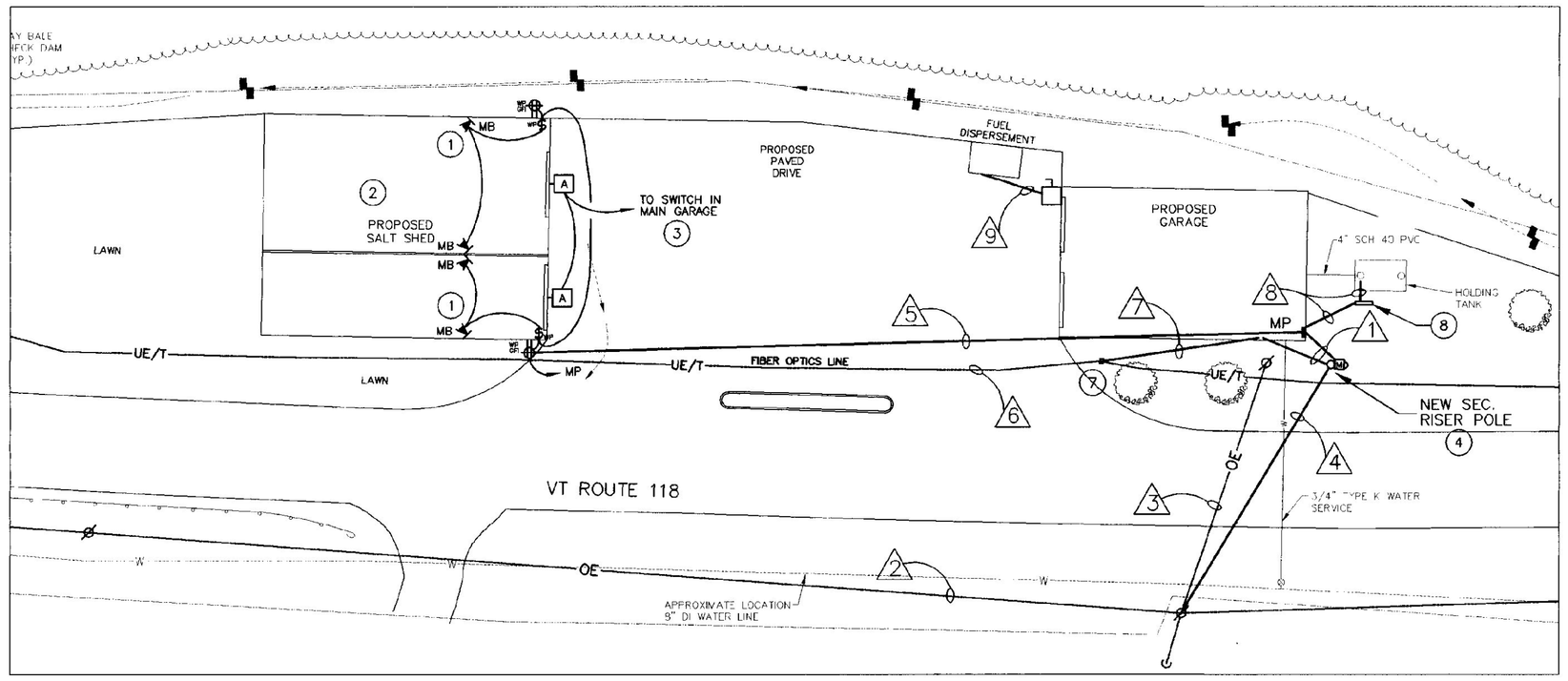

FLOOR PLAN – LIGHTING PLAN

SCALE: 1" = 30'-0"

HORIZONTAL SCALE IN FEET

30 15 0 30 60 90 120

KEY	FEEDER SCHEDULE
1	2-1/2"C, 3-3/0 CU., 2"C TEL., 2-1/2"C SPARE
2	EXISTING OVERHEAD PRIMARY UTILITIES
3	OVERHEAD LINES TO BE RELOCATED TO NEW POLE BY CITIZEN'S UTILITY
4	NEW OVERHEAD SERVICE DROP BY CITIZEN'S UTILITY
5	1"C, 6-#10CU., 1" SPARE
6	EXISTING FIBER-OPTIC LINE
7	2" PVC, CONNECT TO EXISTING FIBER OPTIC SPLICE BOX
8	1"C, 5-#12CU.
9	(1) 3/4" IMC, 6-#12, (1) 3/4" IMC SPARE

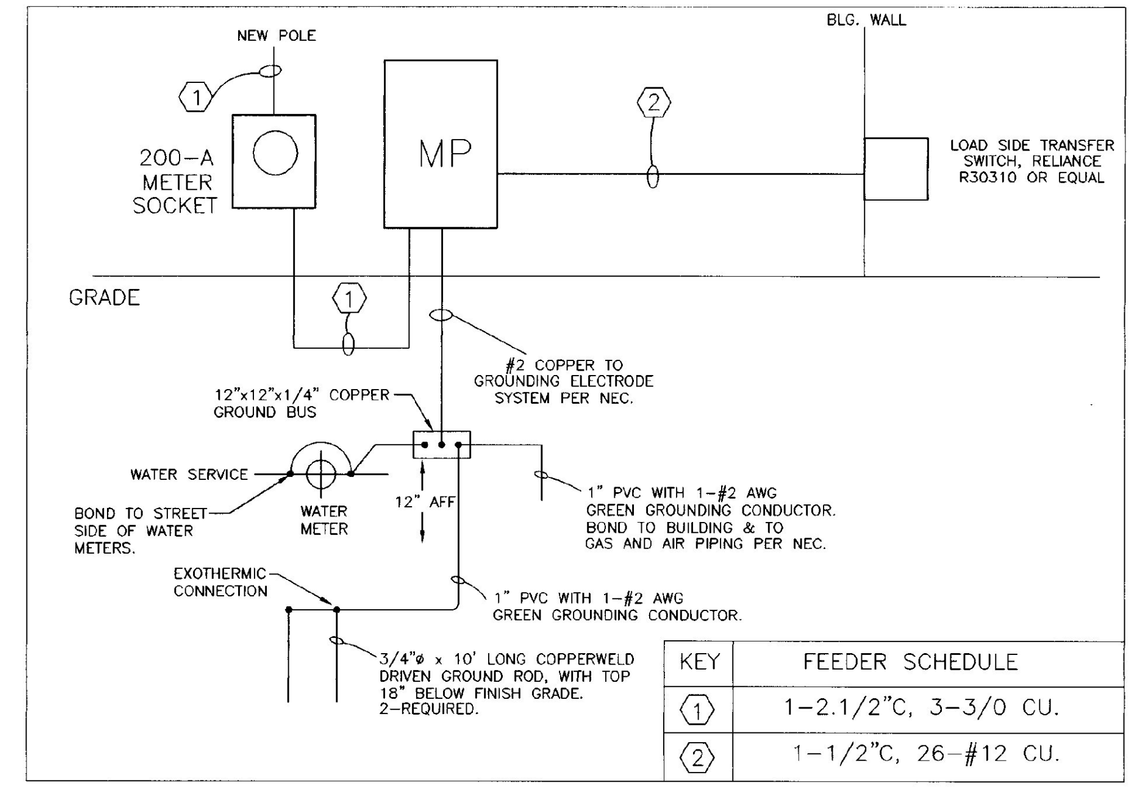

KEY	FEEDER SCHEDULE
1	1-2.1/2"C, 3-3/0 CU.
2	1-1/2"C, 26-#12 CU.

POWER ONE-LINE DIAGRAM

NO SCALE

KEYED NOTES:

1. ALL CONDUIT AFTER FIRST JUNCTION BOX SHALL BE 3/4" RIGID WITH EXPLOSION-PROOF FITTINGS AND JUNCTION BOXES. CONDUIT FROM PANEL MP TO JUNCTION BOX SHALL BE 1" RIGID.
2. PROVIDE 1 SPARE 3/4" CONDUIT FROM PANEL MP IN ELEC. ROOM TO JUNCTION BOX.
3. PROVIDE FLEXIBLE EXPLOSION-PROOF CONNECTOR FROM J-BOX TO PUMP MOTOR.
4. PROVIDE 2-POLE, 20-AMP, MAINTAINED CONTACT, EMERGENCY SHUT-OFF SWITCH. SWITCH SHALL INTERRUPT LINE AND NEUTRAL. SWITCH SHALL BE RESET (TURNED ON) WITH A KEY. MOUNT SWITCH 48" AFG. ON 3" BOLLARD. REFER TO BOLLARD DETAIL. SIEMENS #FXDEMS01 WITH 3SB03-KKR, P3HPL-27.
5. SOLENOID LOCATED ON TANK, SUPPLIED BY GC WIRED BY EC.
6. COORDINATE ALL WIRING WITH ES. ALL WIRING SHALL CONFORM TO CLASS I, DIV. I & DIV. II REQUIREMENTS.
7. PROVIDE ALL NECESSARY ELECTRICAL EQUIPMENT FOR ENTIRE INSTALLATION. COORDINATE REQUIREMENTS WITH ES SHOP DRAWINGS.

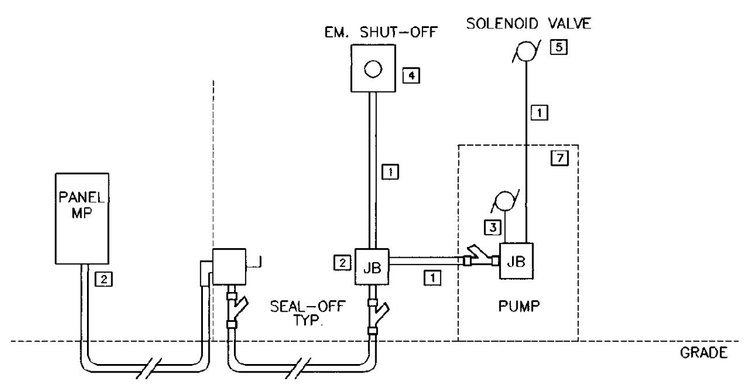

FUEL DISBURSEMENT DETAIL

NO SCALE

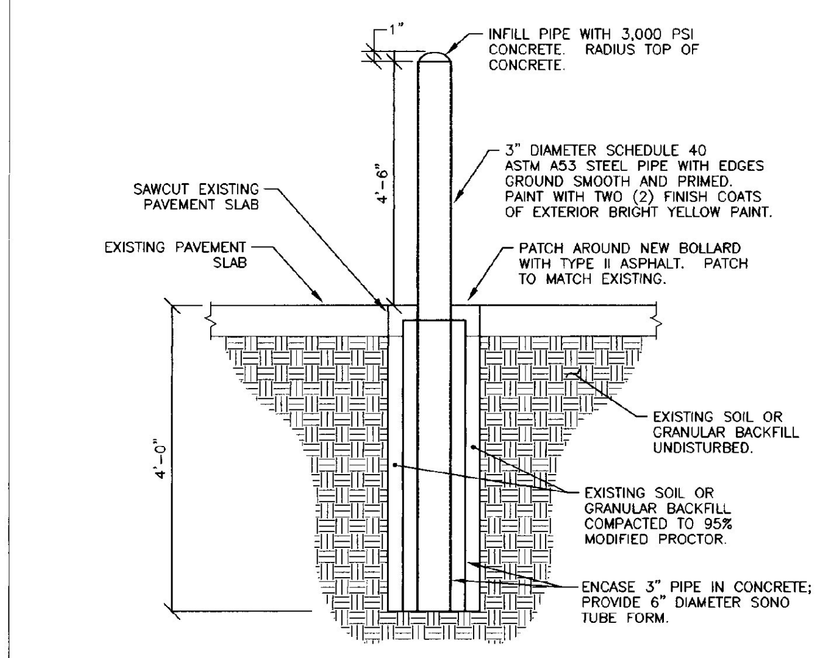

TYPICAL CONCRETE BOLLARD DETAIL

NO SCALE

NOTE:

ALL POLE CONSTRUCTION AND CABLE TERMINATION BY ELECTRIC DEPT. CONTRACTOR TO SUPPLY ALL EQUIPMENT AND HARDWARE NECESSARY.

COORDINATE ALL WORK WITH CITIZEN'S UTILITY-EVAN MERCY (802)-848-7426.

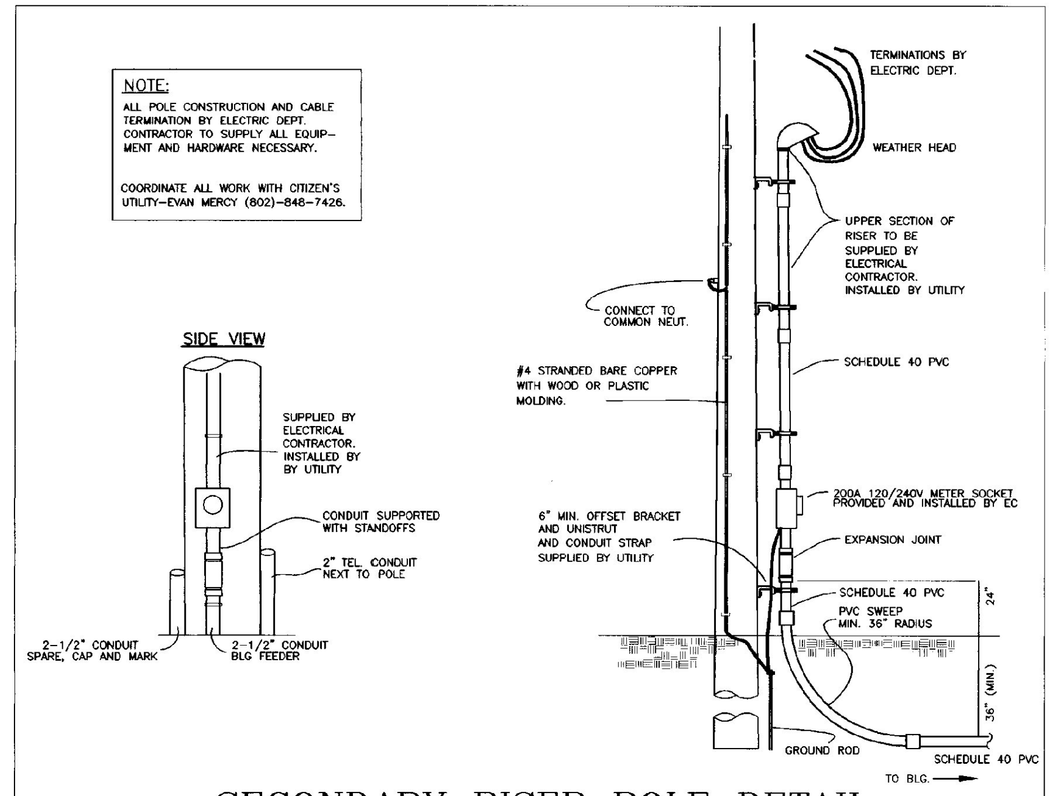

SECONDARY RISER POLE DETAIL

NO SCALE

GENERAL NOTES:

A. ANY PLACE WHERE THE CONTRACTOR PENETRATES, CUTS AND/OR REMOVES WALLS, CEILINGS, OR WOODWORK, CONTRACTOR IS TO REPLACE, PATCH AND PAINT FINISH SURFACES TO ORIGINAL FINISHES.

B. FIELD VERIFY ALL DIMENSIONS BEFORE COMMENCEMENT OF WORK . NOTIFY ENGINEER OF ANY ERRORS.

C. EC TO PROVIDE AND INSTALL ALL DISCONNECT SWITCHES, MC TO SUPPLY ALL MOTOR STARTERS, EC TO INSTALL.

KEYED NOTES:

1. MOTION DETECTORS SHALL WORK IN TANDEM, SWITCH SHALL OVERRIDE THE MOTION DETECTORS.
2. NO CONDUIT BELOW 8' IN SALT SHED. ALL SHED AND EXPOSED EXTERIOR CONDUIT SHALL BE PVC CONDUIT.
3. PROVIDE 2-1" CONDUITS TO FROM MAIN BUILDING TO SHED. 1 CONDUIT FOR OUTSIDE LIGHTS AND POWER CIRCUIT, 1 CONDUIT SPARE FOR FUTURE USE.
4. EXISTING UTILITY POLE TO BE RELOCATED. COORDINATE WITH UTILITY. EC SHALL INCLUDE $1000 ALLOWANCE FOR UTILITY CHARGES ASSOCIATED WITH RELOCATING THE POLE AND OVERHEAD SERVICE.
5. ALL WIRING ASSOCIATED WITH FUEL DISPERSING STATION SHALL BE IN ACCORDANCE WITH NEC ARTICLES #514 & #515. VERIFY EXISTING CONDITIONS PRIOR TO BID DATE. DO NOT CROSS SEWER PIPING WITH CONDUIT RUNS.
6. USE STEEL SWEEP AT METER SOCKET.
7. APPROX. LOCATION OF EXISTING FIBER OPTIC CONNECTION POINT. PROVIDE 2" FROM THIS POINT TO TELEPHONE TERMINATION AREA.
8. REFER TO PEDESTAL DETAIL FOR TANK LEVEL MONITORING WIRING.

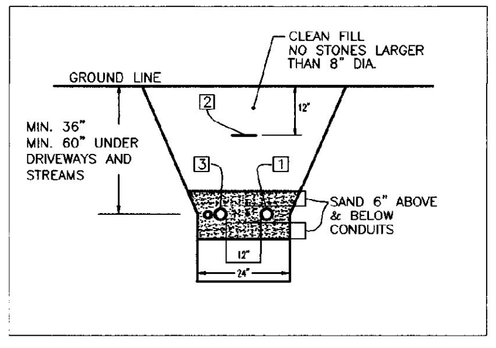

TRENCH DETAIL

NO SCALE

KEYED NOTES	
KEY	DESCRIPTION
1	SERVICE CABLE DUCT SHALL BE PVC SCHEDULE 40. UNDER ROADS & DRIVEWAYS TO BE SCHEDULE 80.
2	WARNING TAPE SHALL BE ELECTRIC LEGEND TYPE. ALLEN CAT.#ANT-1006-RE OR EQUAL. (WARNING TAPE SHALL BE PLACED 12" BELOW SURFACE.)
3	TEL. DUCT SHALL BE PVC SCHEDULE 40. UNDER ROADS & DRIVEWAYS TO BE SCHEDULE 80. MAINTAIN 12" SEPARATION FROM ELECTRIC. PROVIDE SPARE 2-1/2" CONDUIT.

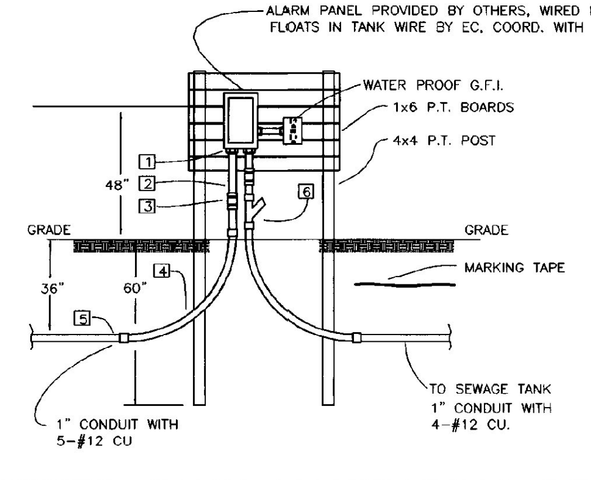

1 THREADED BUSHING
2 CONDUIT – SCHEDULE 40
3 SLIP JOINT
4 90° SCHEDULE 40 SWEEP (STANDARD RADIUS)
5 CONDUIT – SCHEDULE 40
6 SEAL-OFF

SEWER TANK MONITORING PEDESTAL DETAIL

NO SCALE

STATE OF VERMONT
Department of Buildings and General Services
Agency of Administration
Montpelier, Vermont

Pearson & Associates
MECHANICAL & ELECTRICAL ENGINEERS
P.O. BOX 610 STOWE, VERMONT 05672
TEL. (802) 253-9607 FAX. (802) 253-9290
EMAIL: pearson@stowevt.net

AGENCY OF TRANSPORTATION MONTGOMERY GARAGE & SALT SHED
MONTGOMERY VERMONT

REVISIONS

SCALE: AS SHOWN
DATE: MAY 2003
DRAWN BY: ASG
APPR. BY: E. E. P.

AGENCY OF TRANSPORTATION GARAGE

ELECTRICAL PLAN

E-3