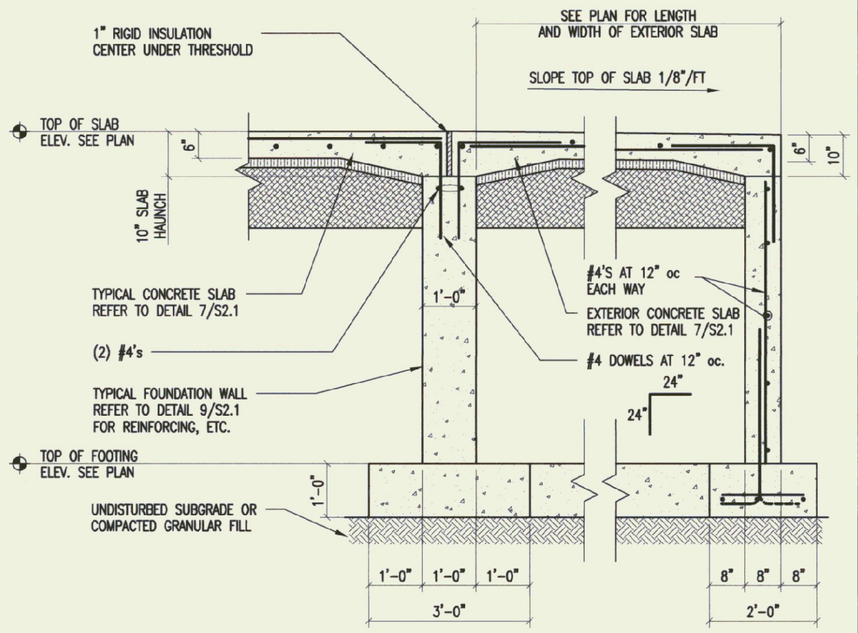

TYPICAL ENTRY SLAB AT EXTERIOR DOOR (1)

1/2" = 1'-0"

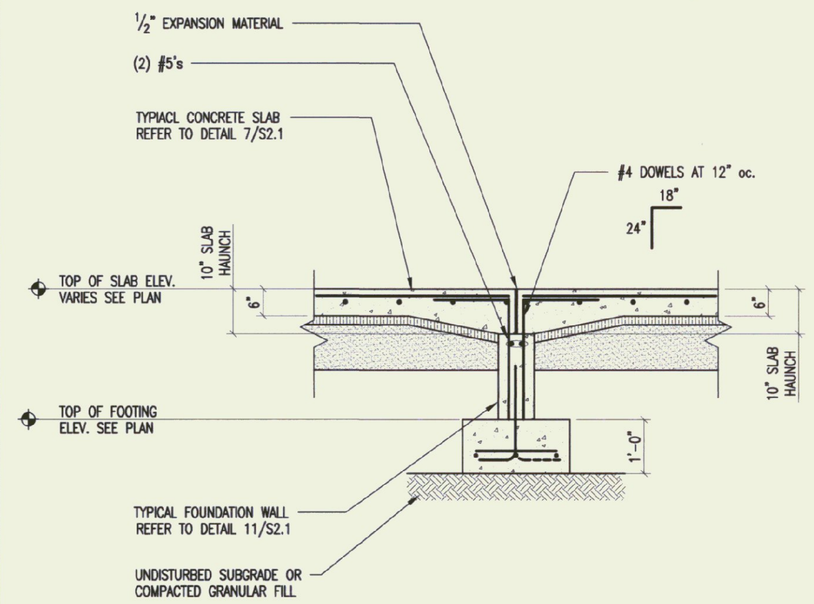

TYPICAL SLAB AT INTERIOR DOOR (2)

1/2" = 1'-0"

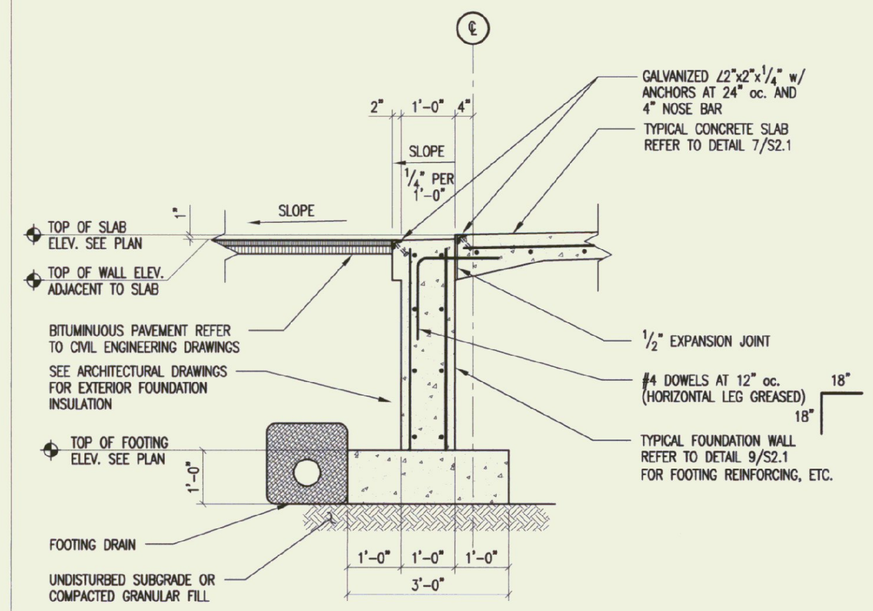

FOUNDATION WALL AND SLAB DETAIL AT OVERHEAD DOORS (3)

1/2" = 1'-0"

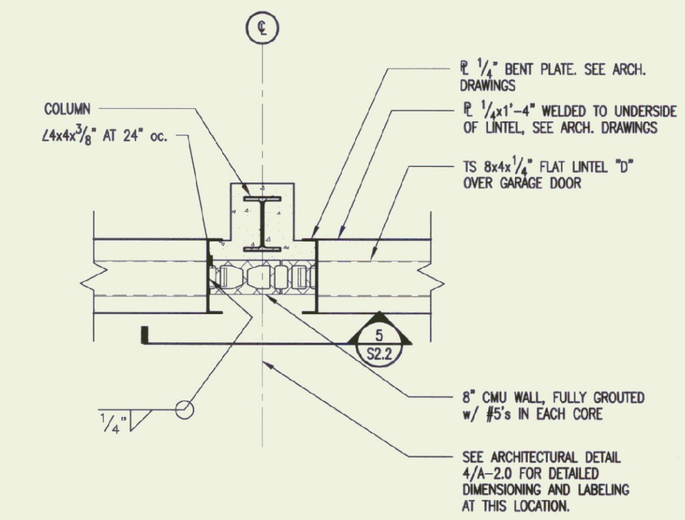

GARAGE DOOR LINTEL AND JAMB SECTION (4)

1/2" = 1'-0"

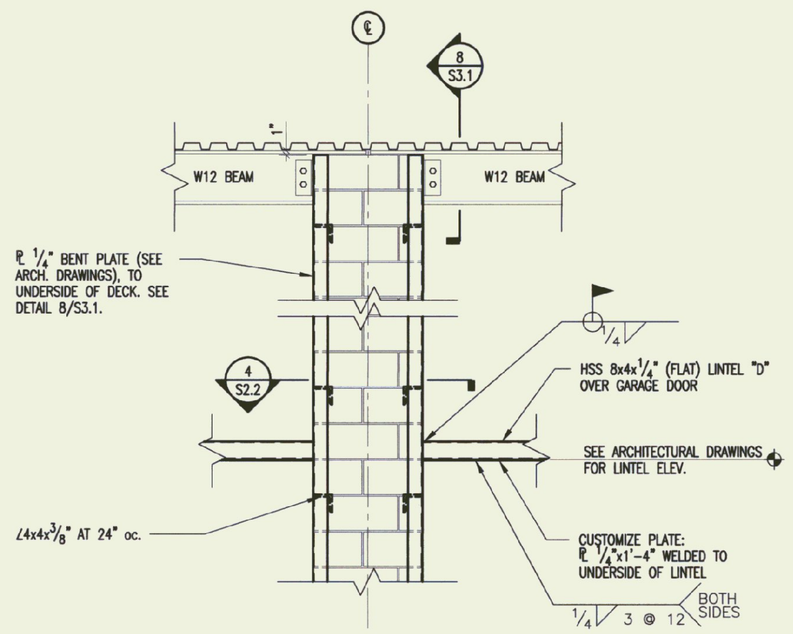

GARAGE DOOR LINTEL AND JAMB DETAIL (5)

1/2" = 1'-0"

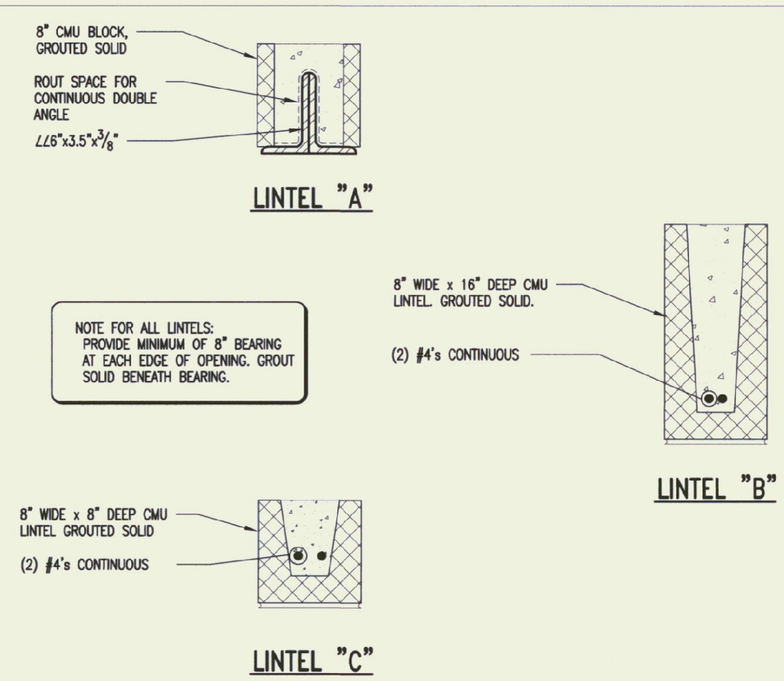

TYPICAL LINTELS (6)

1/2" = 1'-0"

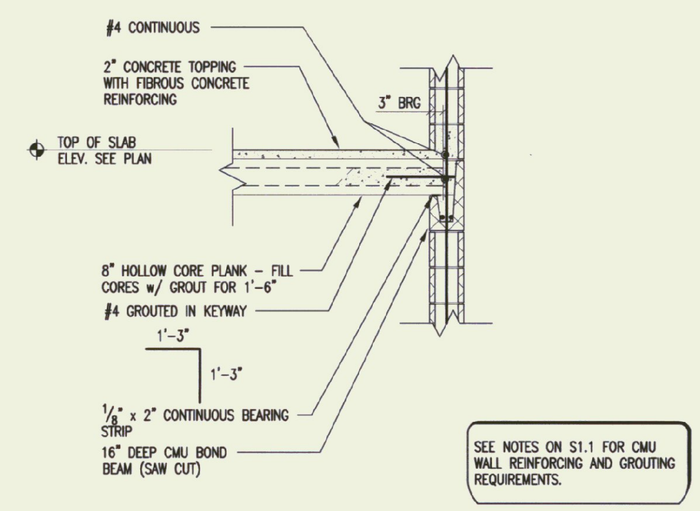

EXTERIOR WALL BEARING SECTION (7)

1/2" = 1'-0"

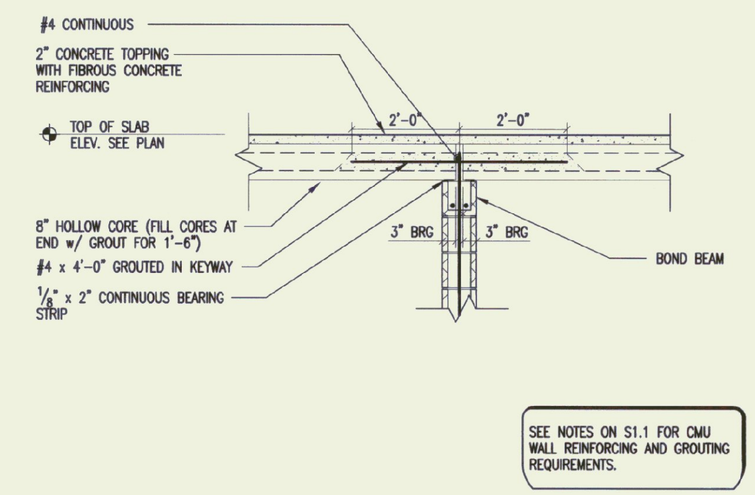

INTERMEDIATE WALL BEARING SECTION (8)

1/2" = 1'-0"

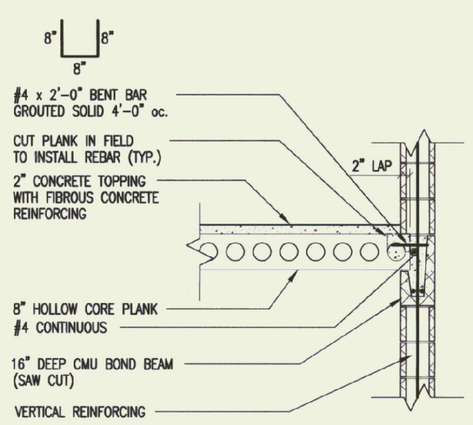

SIDE WALL - LAP SECTION (9)

1/2" = 1'-0"

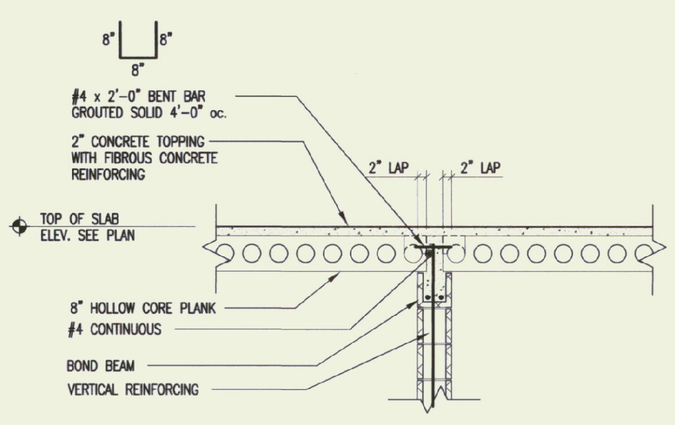

INTERMEDIATE WALL- LAP SECTION (10)

1/2" = 1'-0"

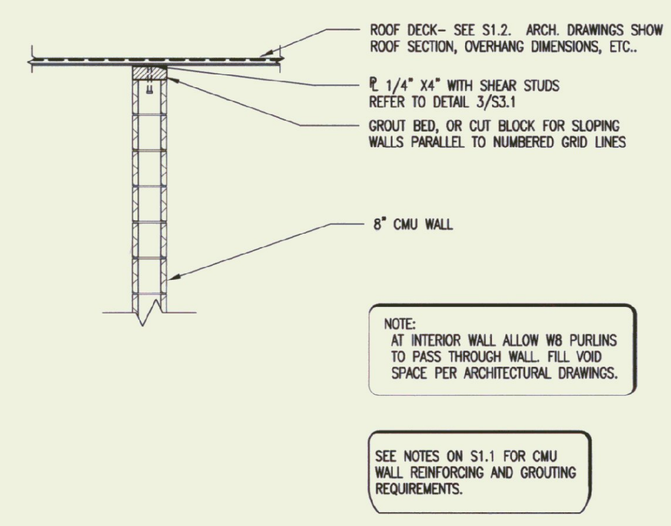

ROOF DECK AT TOP OF CMU WALL (11)

1/2" = 1'-0"

0 1' 2' 4'

SCALE: 1/2" = 1'-0"

STATE OF VERMONT KEVIN WONDERLY No. 7480 PROFESSIONAL ENGINEER

ENGINEERING VENTURES INC
826 Pine Avenue, Suite 3A
Williston, VT 05495
tel: 802.865.6926
fax: 802.865.6925
Engineering@Ventures.com

1795 WILLISTON RD, STE 5
S. BURLINGTON, VT 05403
Phone: (802) 863-4328
Fax: (802) 863-6955

1400 HANCOCK STREET
QUINCY, MA 02169
Phone: (617) 471-2897
Fax: (617) 471-2346

DORE AND WHITTIER, INC.
Architects • Project Managers

STATE OF VERMONT
DEPARTMENT OF BUILDINGS AND GENERAL SERVICES
AGENCY OF ADMINISTRATION
MONTPELIER, VERMONT

AGENCY OF TRANSPORTATION
HIGHGATE MAINTENANCE FACILITY
HIGHGATE VERMONT

REVISIONS

SCALE: AS NOTED
DATE: 9/24/01
DRAWN BY: WP/TJ
APPR. BY: WP/KW

HIGHGATE
MAINTENANCE GARAGE
STRUCTURAL DETAILS

S-2.2

S:\PROJECTS\0-2000\00552 Highgate State Garage\dwg\00552s2-2.dwg Mon Sep 24 14:02:47 2001 Engineering Ventures Inc.