BASIS OF DESIGN:

12 EMPLOYEES @ 15 gpd/EMPLOYEE = 180 gpd

WATER SAVING ALLOWANCE = .9 X 180 = 162 gpd

REQUIRED DISPOSAL AREA = 162 gpd / 1.5 gpd per sq ft = 108 sq ft.

USE 1 – 27' X 4' TRENCH = 108 sq ft. OF DISPOSAL AREA FOR PRIMARY AND REPLACEMENT DISPOSAL FIELDS

INSTALL A NEW 1000 GALLON PRECAST CONCRETE SEPTIC TANK

PERIODIC MAINTENANCE NOTES:

SEPTIC TANK

(1) The depth of sludge and scum in the septic tank shall be measured annually by the Owner. The septic tank shall be pumped if the sludge is closer than 3" to the septic tank outlet baffle.

(2) All interior surfaces shall be inspected for cracking after the septic tank has been pumped.

(3) The effluent filters should be rinsed clean regularly.

WASTEWATER DISPOSAL AREA

(1) Maintain turf conditions throughout the summer months by mowing the grass to 2 1/2" – 3" in length; reseed all bare spots.

(2) At least once per year, open the distribution box and remove all settled solids as necessary.

TEST PIT SUMMARY:

TP #1	0– 6"	TOPSOIL & DUFF
	6–84"	MEDIUM TEXTURED SAND NO MOTTLING TO DEPTH
TP #2	0– 6"	TOPSOIL & DUFF
	6–108"	MEDIUM TEXTURED SAND NO MOTTLING TO DEPTH

PERCOLATION TEST SUMMARY:

PT #1 1 MIN./INCH

PT #2 1 MIN./INCH

DEPTH OF PERC. TESTS: 30"

SOILS INVESTIGATION COMPLETED BY CHAMPLAIN CONSULTING ENGINEERS ON 05/31/01.

CONSTRUCTION NOTES:

(1) The wastewater disposal system design shall be reviewed with the General Contractor prior to commencement of construction, and reviewed during the critical phases of construction by a representative from Champlain Consulting Engineers to confirm compliance with the construction drawings. The General Contractor shall be responsible for establishing the construction schedule. Forty-eight (48) hours advance notice is required for all construction reviews.

(2) The sides and bottom of the disposal trenches shall be raked to scarify any smeared soil surfaces after excavation is completed. All loose material shall be removed from the disposal trenches.

(3) The distribution lines shall be placed on the crushed stone bedding with no slope, and covered with crushed stone as per the disposal trench detail.

(4) The area around the wastewater disposal system shall be graded to provide diversion of surface runoff water from the disposal area.

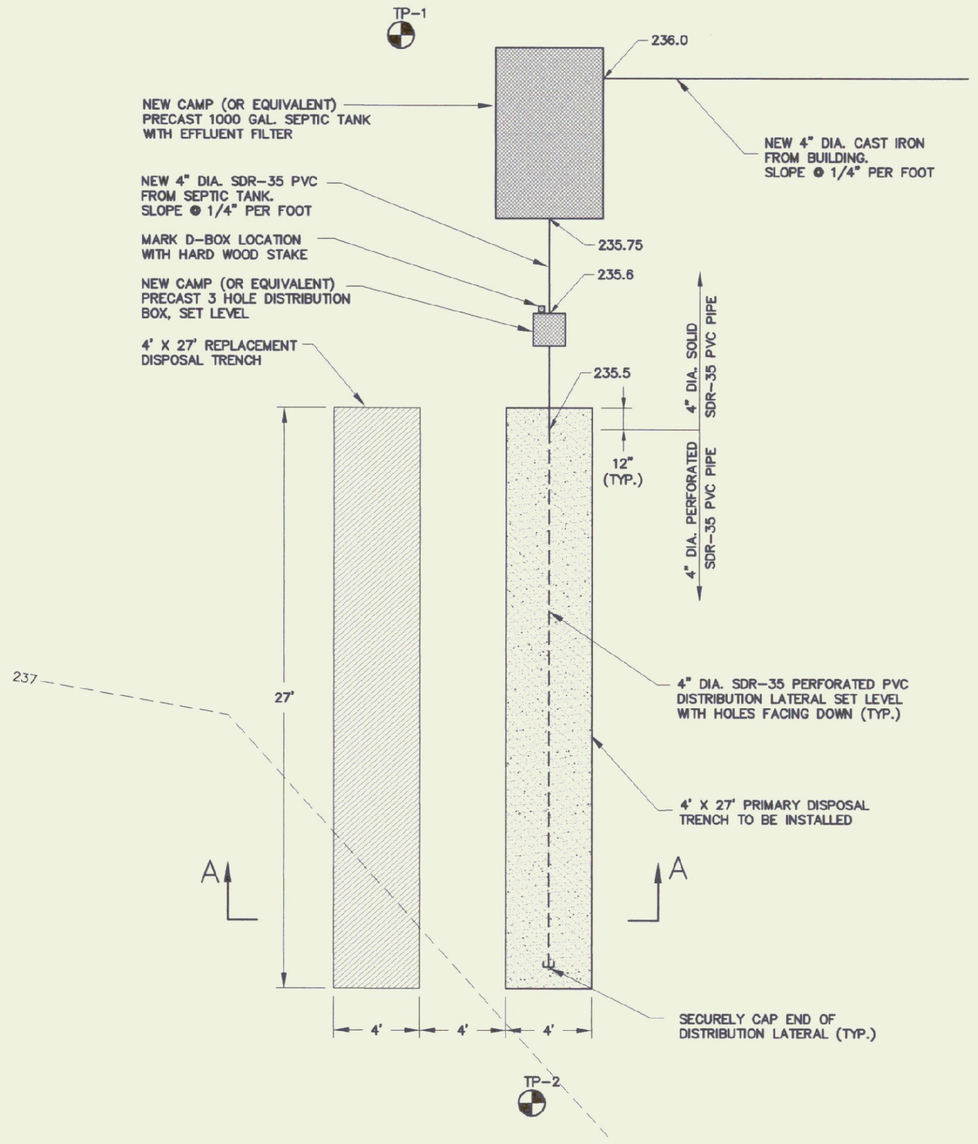

1 C-4 DISPOSAL AREA PLAN
SCALE: 1" = 5'

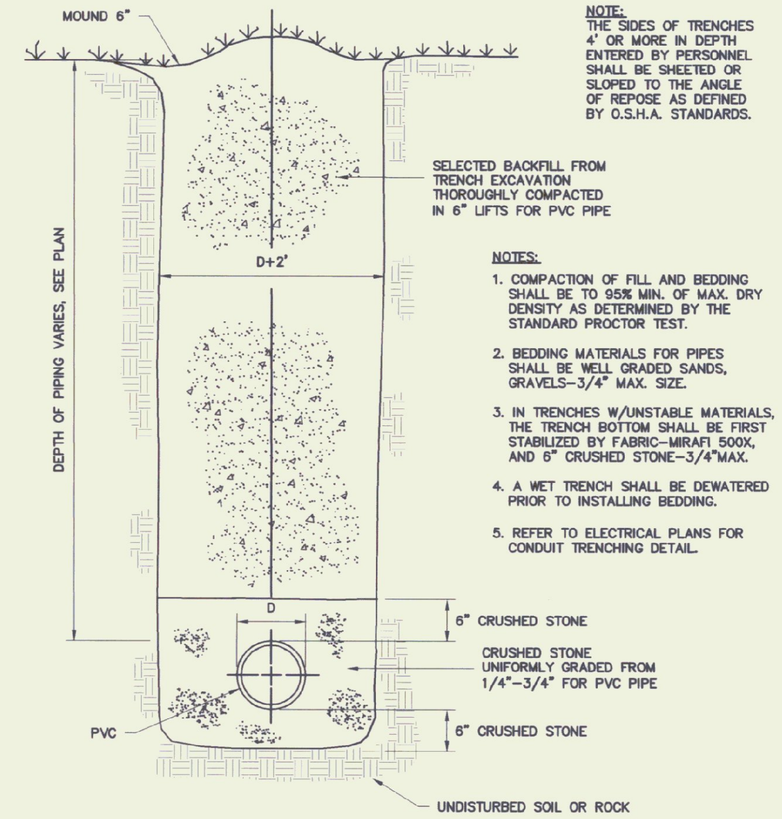

NOTE:
THE SIDES OF TRENCHES 4' OR MORE IN DEPTH ENTERED BY PERSONNEL SHALL BE SHEETED OR SLOPED TO THE ANGLE OF REPOSE AS DEFINED BY O.S.H.A. STANDARDS.

SELECTED BACKFILL FROM TRENCH EXCAVATION THOROUGHLY COMPACTED IN 6" LIFTS FOR PVC PIPE

NOTES:

1. COMPACTION OF FILL AND BEDDING SHALL BE TO 95% MIN. OF MAX. DRY DENSITY AS DETERMINED BY THE STANDARD PROCTOR TEST.
2. BEDDING MATERIALS FOR PIPES SHALL BE WELL GRADED SANDS, GRAVELS–3/4" MAX. SIZE.
3. IN TRENCHES W/UNSTABLE MATERIALS, THE TRENCH BOTTOM SHALL BE FIRST STABILIZED BY FABRIC–MIRAFI 500X, AND 6" CRUSHED STONE–3/4"MAX.
4. A WET TRENCH SHALL BE DEWATERED PRIOR TO INSTALLING BEDDING.
5. REFER TO ELECTRICAL PLANS FOR CONDUIT TRENCHING DETAIL.

2 C-4 TYPICAL EXCAVATION TRENCH DETAIL
N.T.S.

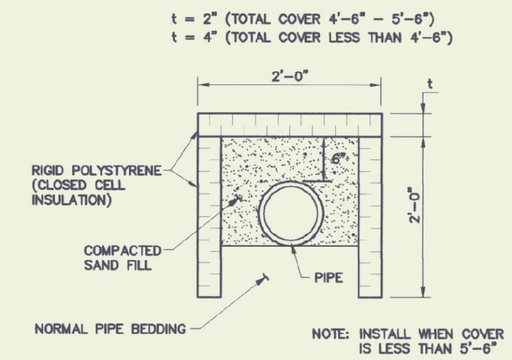

3 C-4 WATER/SEWER INSULATION DETAIL
N.T.S.

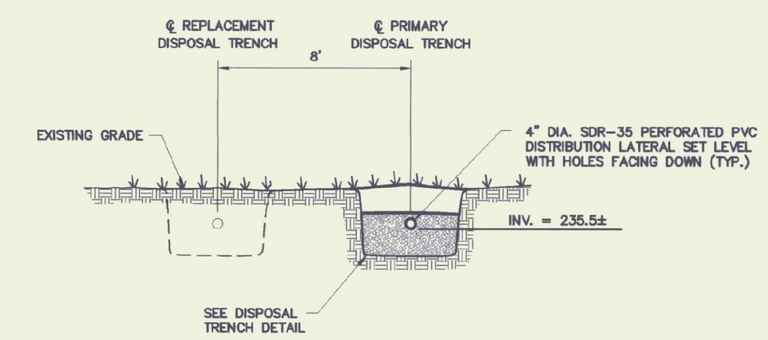

7 C-4 WASTEWATER DISPOSAL AREA SECTION A–A
N.T.S.

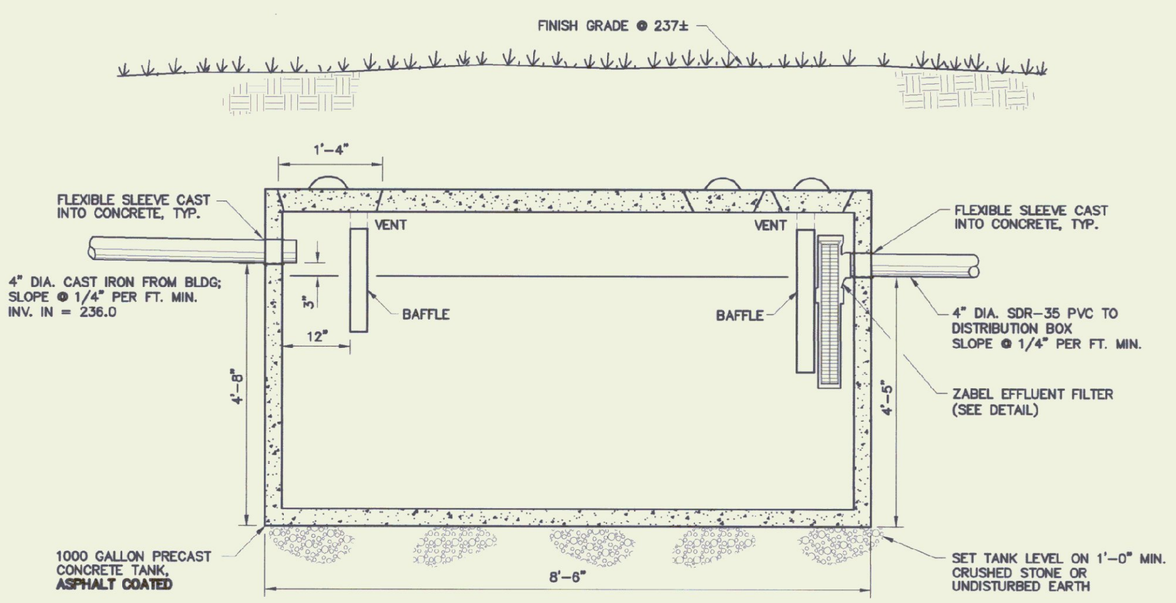

4 C-4 TYPICAL SEPTIC TANK WITH OUTLET FILTER
N.T.S.

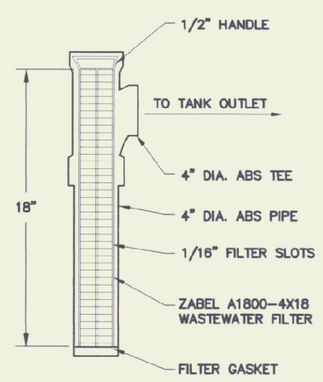

5 C-4 ZABEL WASTEWATER EFFLUENT FILTER
N.T.S.

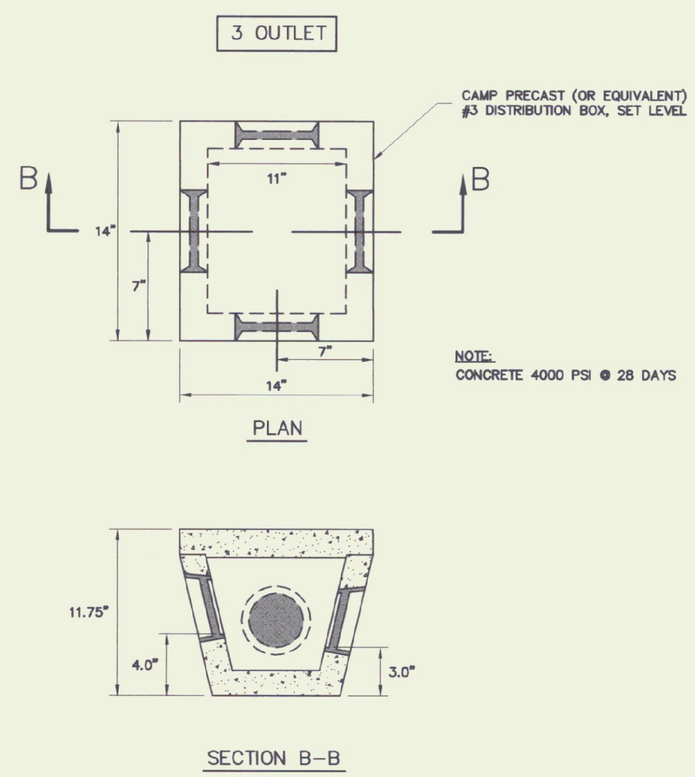

6 C-4 PRECAST CONCRETE DISTRIBUTION BOX DETAIL
N.T.S.

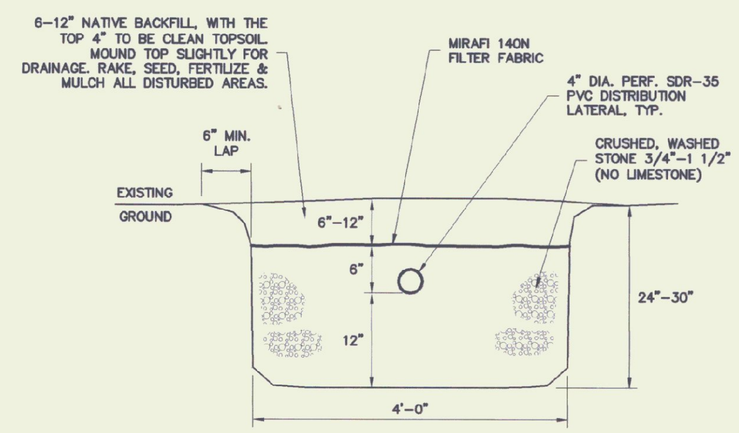

8 C-4 TYPICAL DISPOSAL TRENCH DETAIL
N.T.S.

Champlain Consulting ENGINEERS
85 PRIM ROAD, P.O. BOX 453 COLCHESTER, VERMONT 05446
PHONE: (802) 863-8080 FAX: (802) 864-1978

DORE AND WHITTIER, INC. Architects • Project Managers
1795 WILLISTON RD. STE 5 S. BURLINGTON, VT 05403 Phone: (802) 863-4426 Fax: (802) 863-6955
1400 HANCOCK STREET QUINCY, MA 02169 Phone: (617) 471-2897 Fax: (617) 471-2516

STATE OF VERMONT
DEPARTMENT OF BUILDINGS AND GENERAL SERVICES
AGENCY OF ADMINISTRATION
MONTPELIER, VERMONT

AGENCY OF TRANSPORTATION
HIGHGATE MAINTENANCE FACILITY
HIGHGATE VERMONT

REVISIONS

SCALE:	AS NOTED
DATE:	09/24/01
DRAWN BY:	CCE
APPR. BY:	PD

HIGHGATE

MAINTENANCE GARAGE

WASTEWATER PLAN

C–4