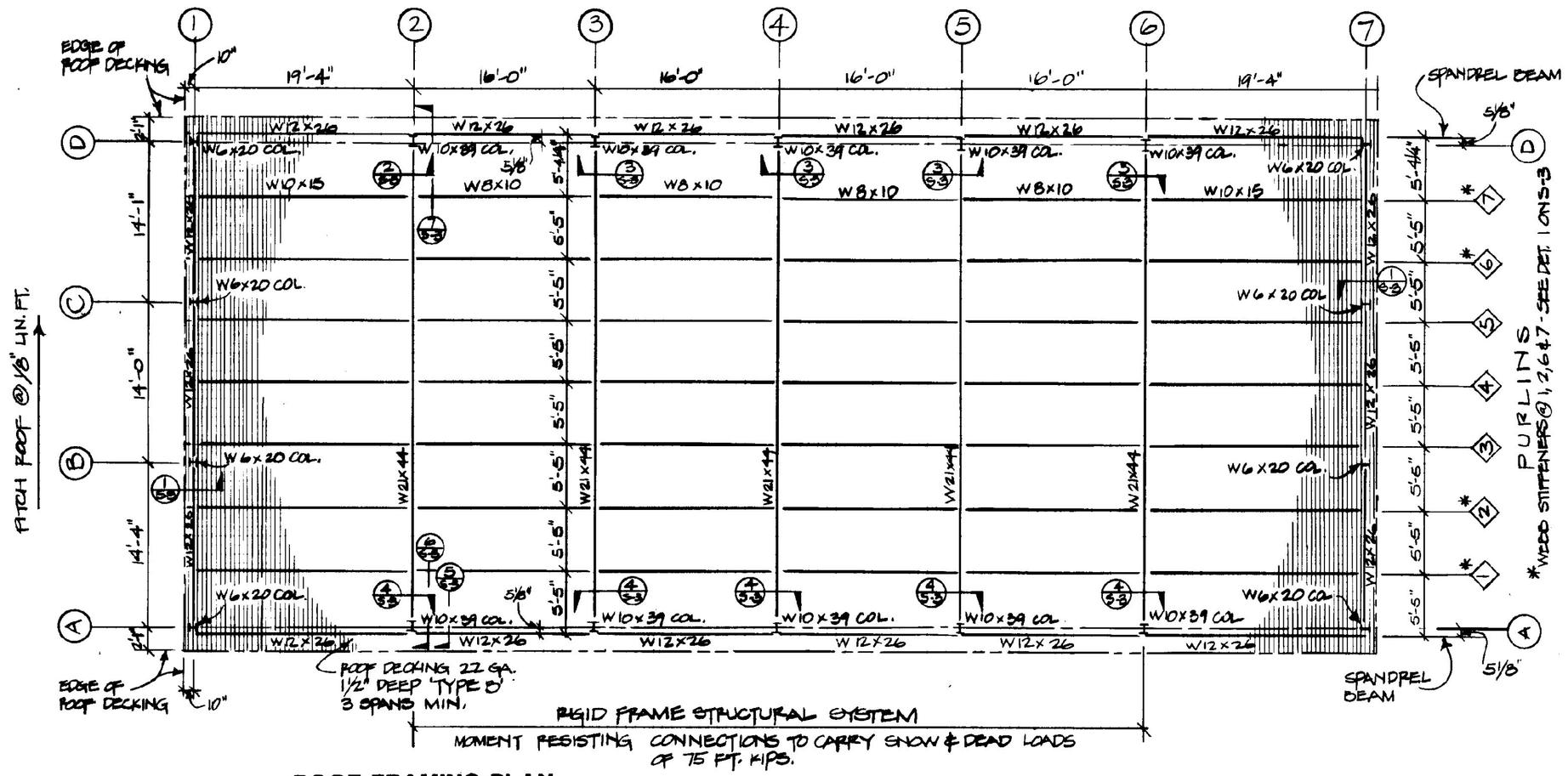

ROOF FRAMING PLAN
SCALE: 1/8" = 1'-0"

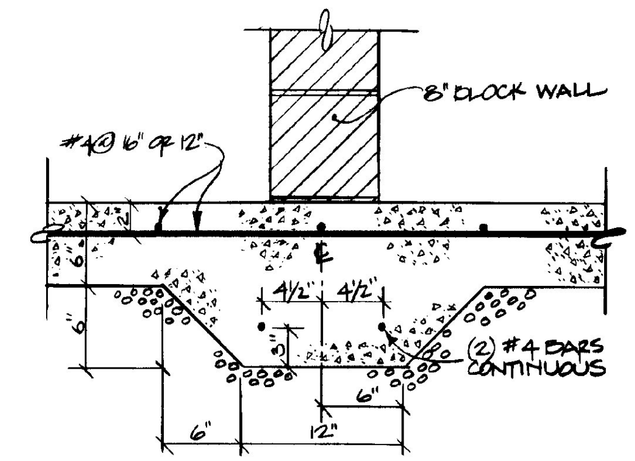

1/S-3 SLAB FOOTING AT BLOCK WALL DETAIL
SCALE: 1-1/2"=1'-0"

LOADING NOTE:

(1) SNOW LOAD = 50#/SF REDUCED/COL. FOR FLAT ROOF
(2) DEAD LOAD = 20#/SF FOR ROOF
(3) WIND LOAD = 20#/SF @ WALLS
(4) MEZZANINE = 100#/SF FLOOR

BASE PLATE NOTES:

@ COL. LINES #1 & #7 BOT. OF BASE PL'S @ +4'-0 3/4"
@ COL. LINES #2, 3, 4, 5, 6 " " " " @ -3/4"

MISC. NOTES:

* CHANNELS FOR GARAGE DOORS (5 DOORS TOTAL) ARE NOT SHOWN ON FRAMING PLAN. SEE A-5, A-6, & S-3.

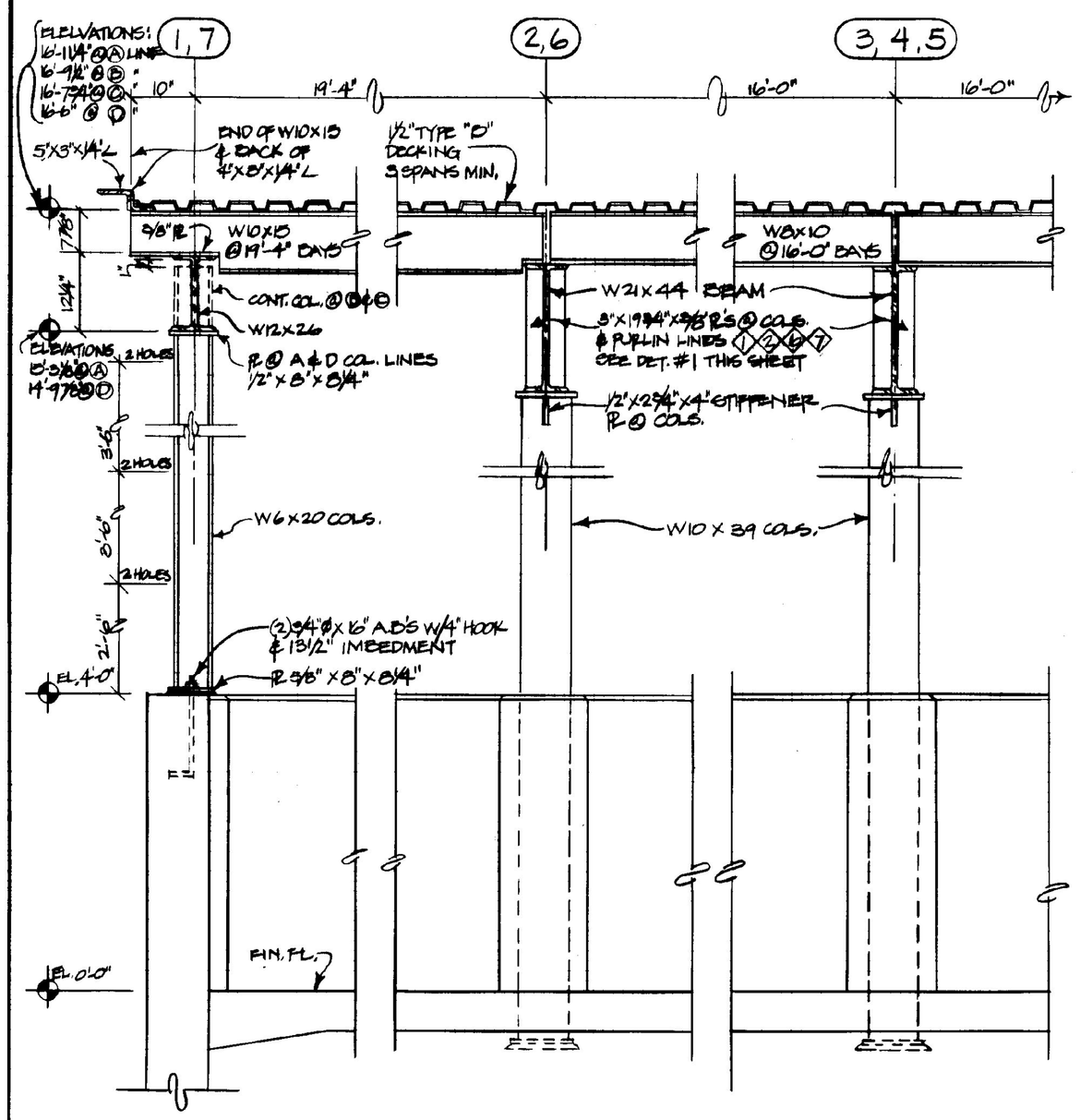

1/S-3 SECTION
SCALE: 3/4" = 1'-0"

2/S-3 SECTION
SCALE: 3/4" = 1'-0"

3/S-3 SECTION
SCALE: 3/4" = 1'-0"

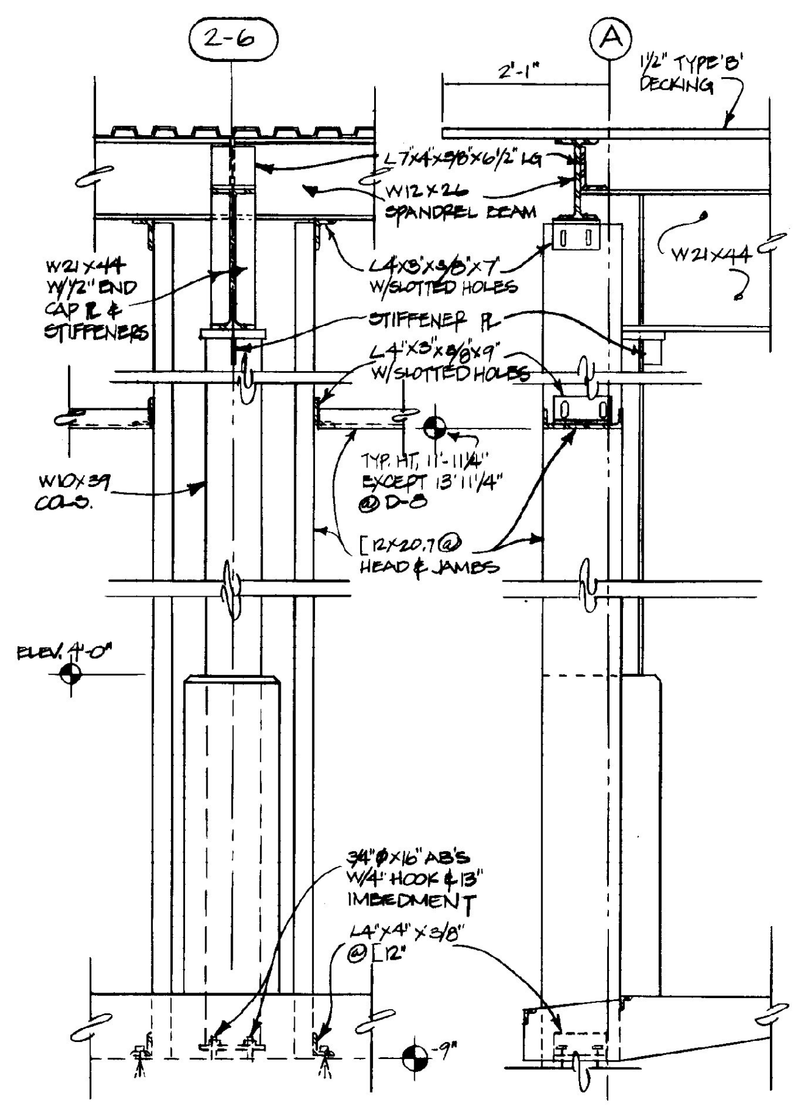

4/S-3 SECTION
SCALE: 3/4" = 1'-0"

5/S-3 SECTION
SCALE: 3/4" = 1'-0"

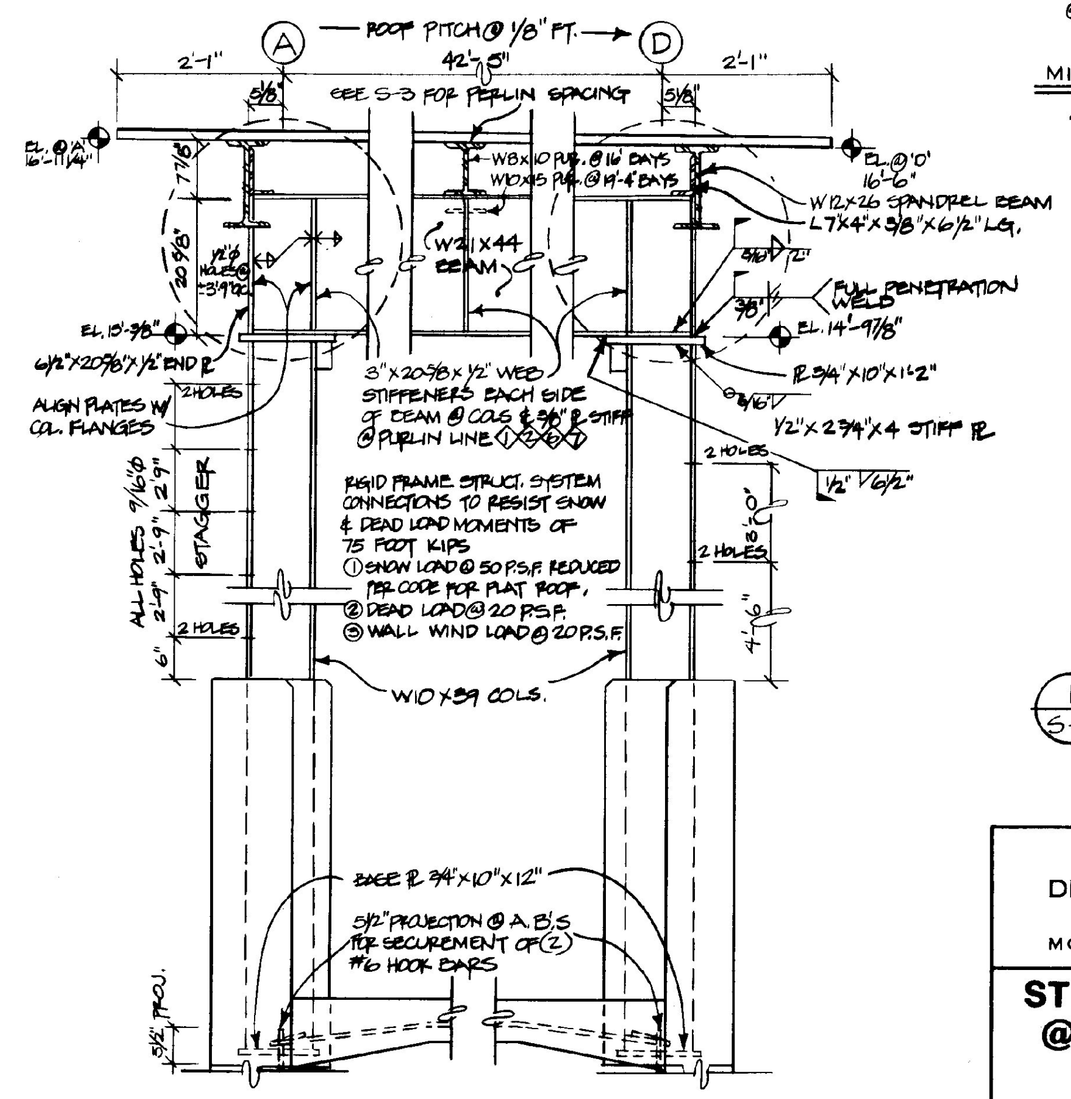

6/S-3 SECTION @ COL. LINE 'A' 2→6
SCALE: 3/4" = 1'-0"

7/S-3 SECTION @ COL. LINE 'D' 2→6
SCALE: 3/4" = 1'-0"

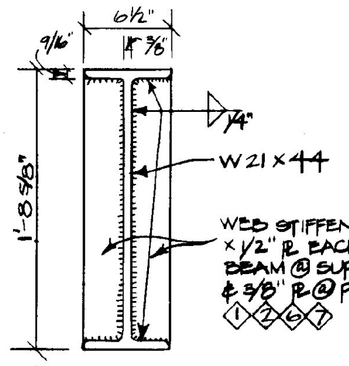

1/S-3 DETAIL-WEB STIFFENERS
SCALE: 1-1/2"=1'-0"

STATE OF VERMONT
DEPARTMENT OF STATE BUILDINGS
AGENCY OF ADMINISTRATION
MONTPELIER, VERMONT

STRUCTURAL STEEL FRAMING @ ROOF & STEEL SECTIONS
VERMONT AGENCY OF TRANSPORTATION
5 BAY MAINTENANCE GARAGE
ENOSBURG FALLS, VERMONT

DATE: MAY 20, 1991	SCALE: AS NOTED	REVISIONS:	DWG NO. S-3
DRAWN BY: A. POULIN	APPROVED BY:		16 OF 24