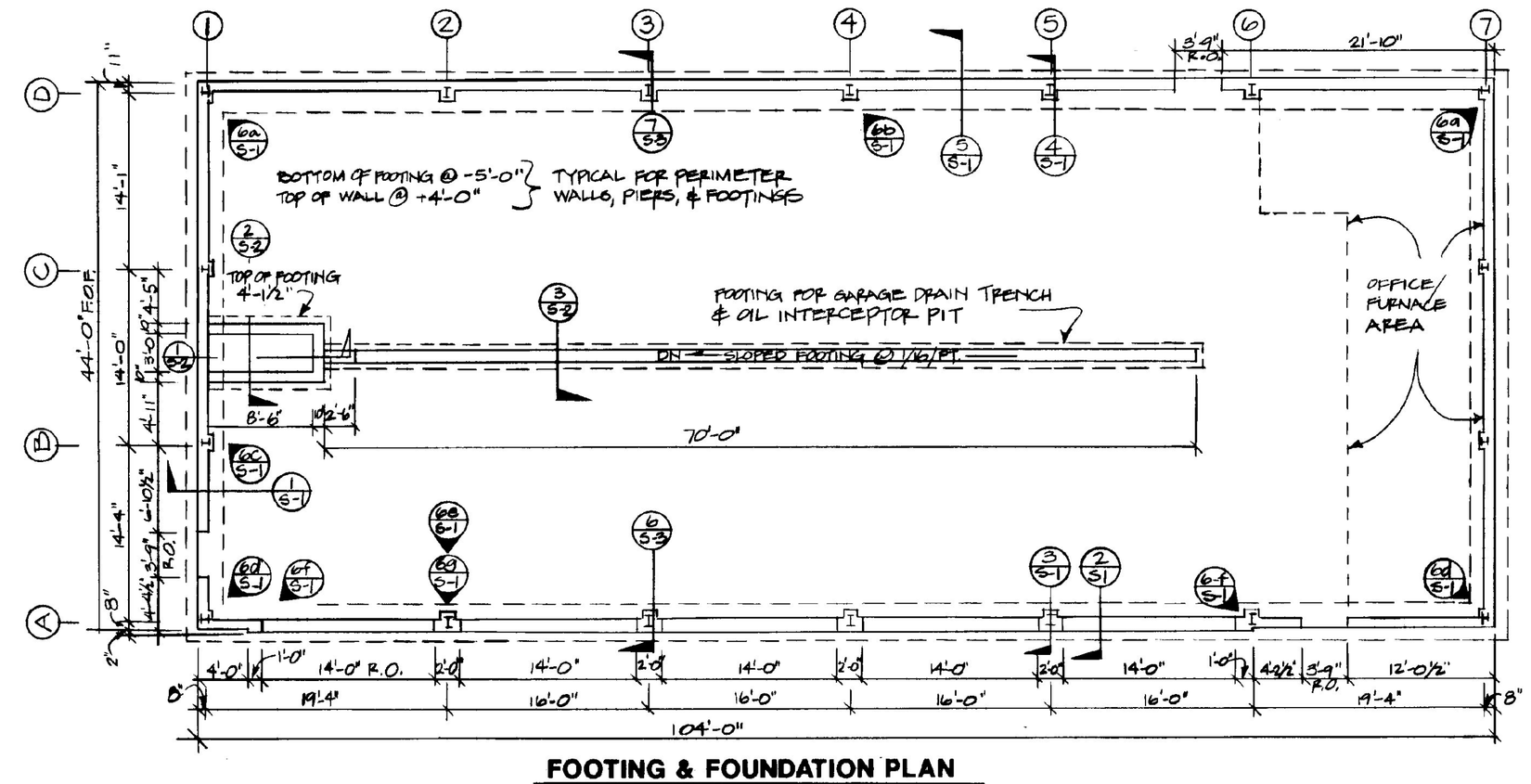

FOOTING & FOUNDATION PLAN

SCALE: 1/8" = 1'-0"

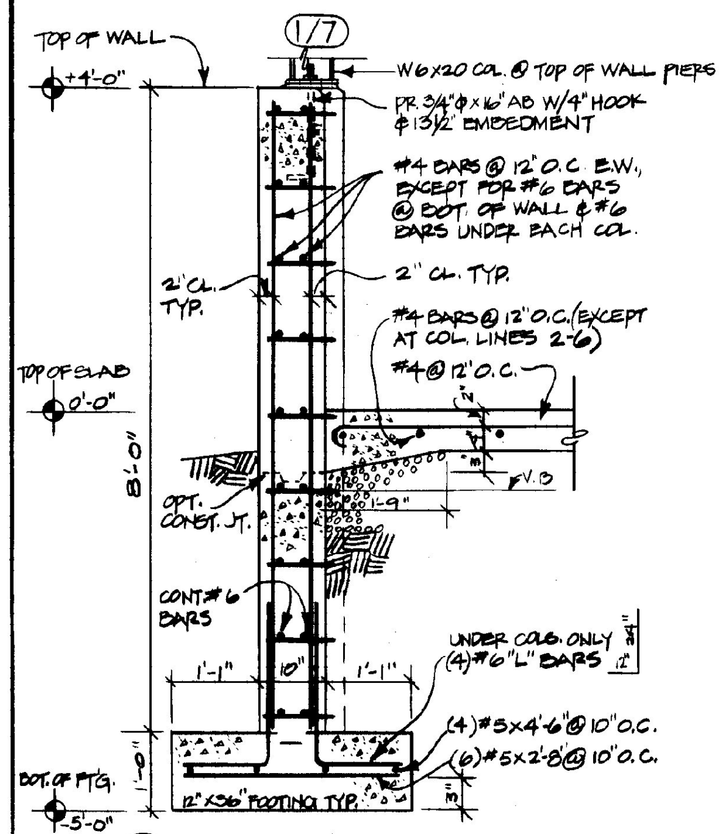

1 S-1 "1" & "7" LINE WALLS

SCALE: 3/4" = 1'-0"

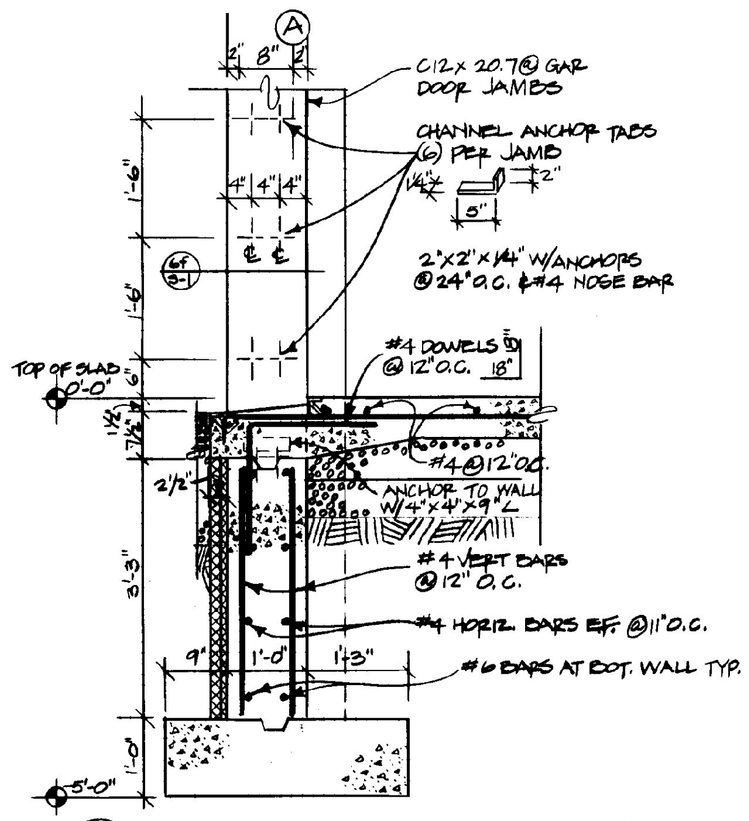

2 S-1 "A" LINE WALL @ GARAGE DOORS

SCALE: 3/4" = 1'-0"

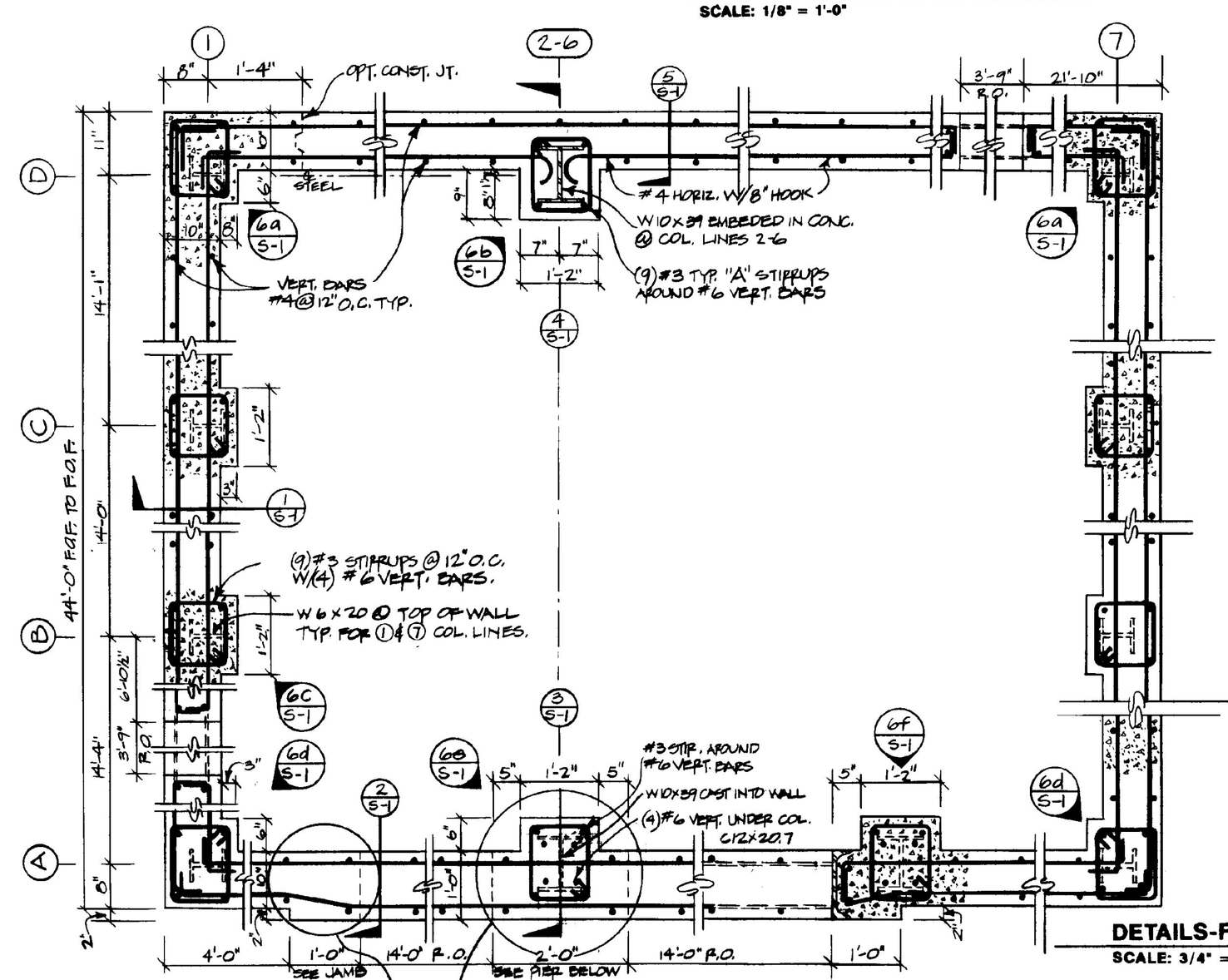

DETAILS-FOUNDATION PLAN

SCALE: 3/4" = 1'-0"

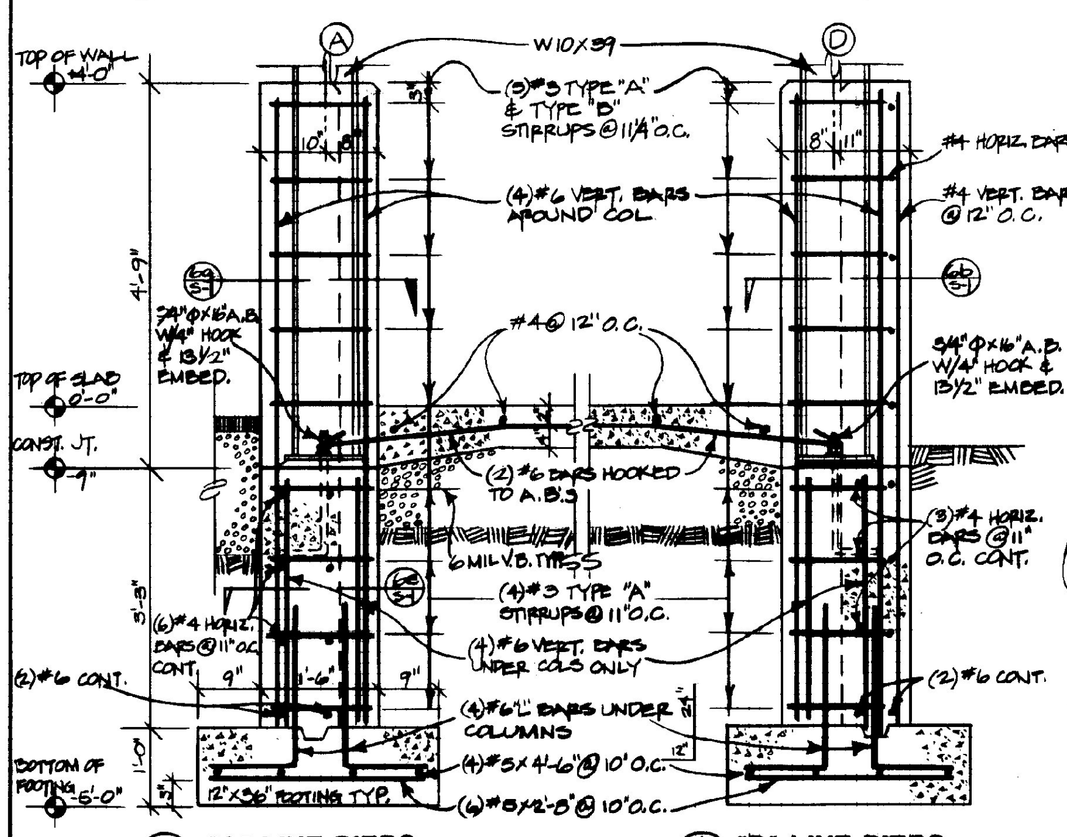

3 S-1 "A" LINE PIERS

SCALE: 3/4" = 1'-0"

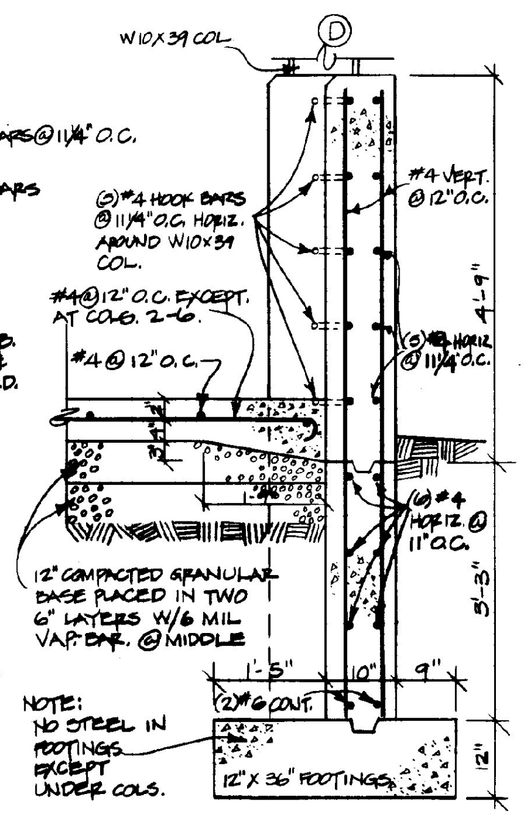

4 S-1 "D" LINE PIERS

SCALE: 3/4" = 1'-0"

5 S-1 "D" LINE WALLS

SCALE: 3/4" = 1'-0"

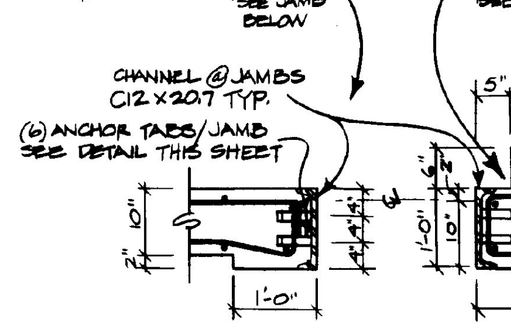

GARAGE DOOR JAMB @ WALL

SCALE: 3/4" = 1'-0"

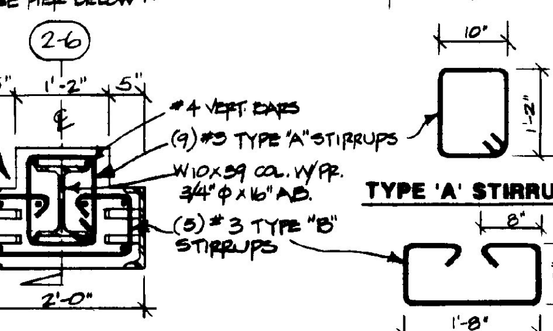

GARAGE DOOR JAMB @ PIER

SCALE: 3/4" = 1'-0"

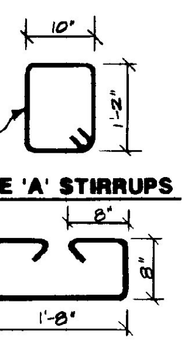

TYPE 'A' STIRRUPS

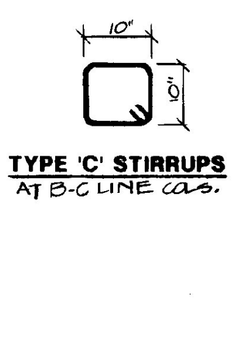

TYPE 'C' STIRRUPS AT B-C LINE COLS.

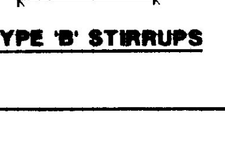

TYPE 'B' STIRRUPS

STATE OF VERMONT
DEPARTMENT OF STATE BUILDINGS
AGENCY OF ADMINISTRATION
MONTPELIER. VERMONT

FOUNDATION PLANS & SECTIONS

VERMONT AGENCY OF TRANSPORTATION
5 BAY MAINTENANCE GARAGE
ENOSBURG FALLS, VERMONT

DATE: MAY 20, 1991	SCALE: AS NOTED	REVISIONS:	DWG. NO. S-1
DRAWN BY: A. POULIN	APPROVED BY:		14 OF 24