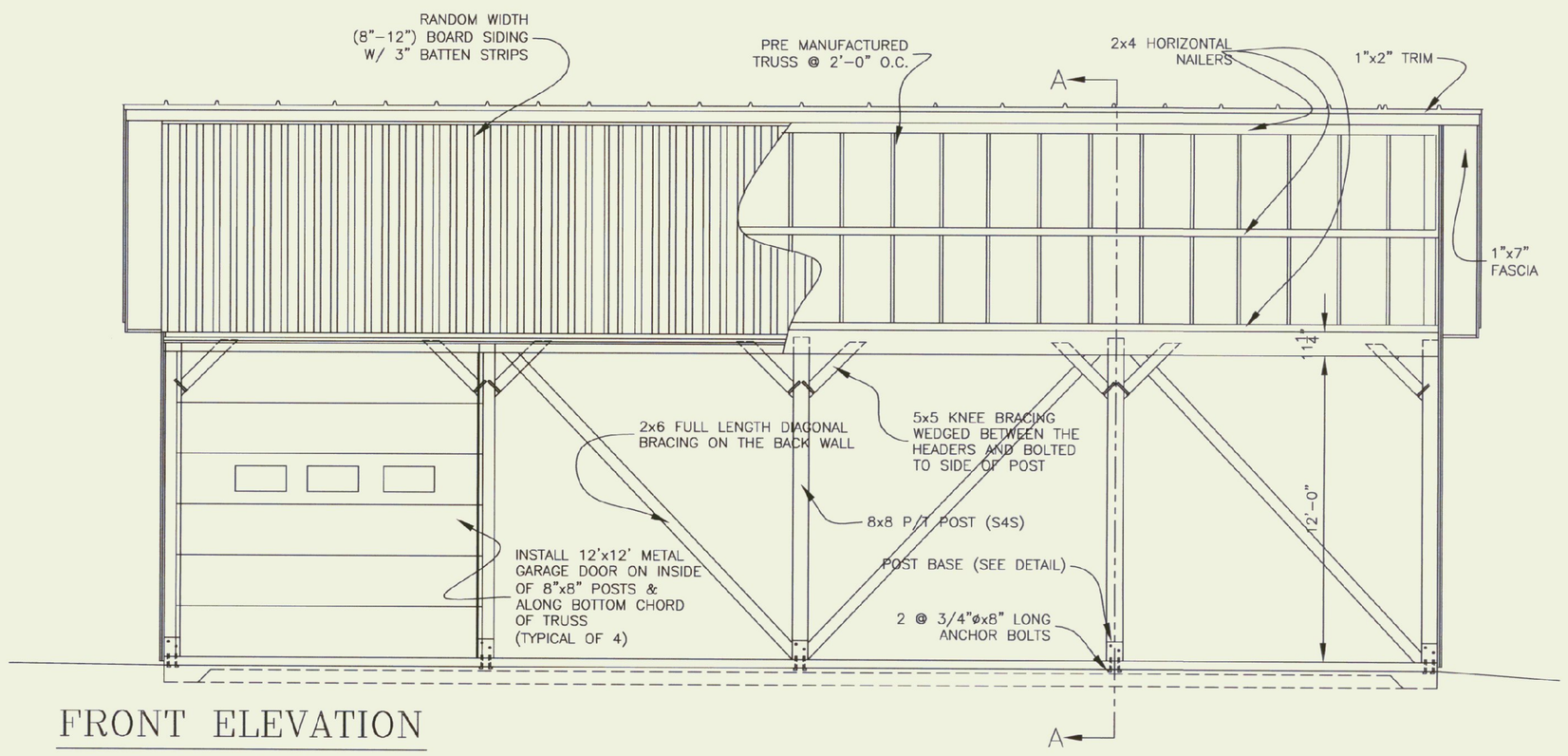

FRONT ELEVATION

SCALE: 1/4" = 1'–0"

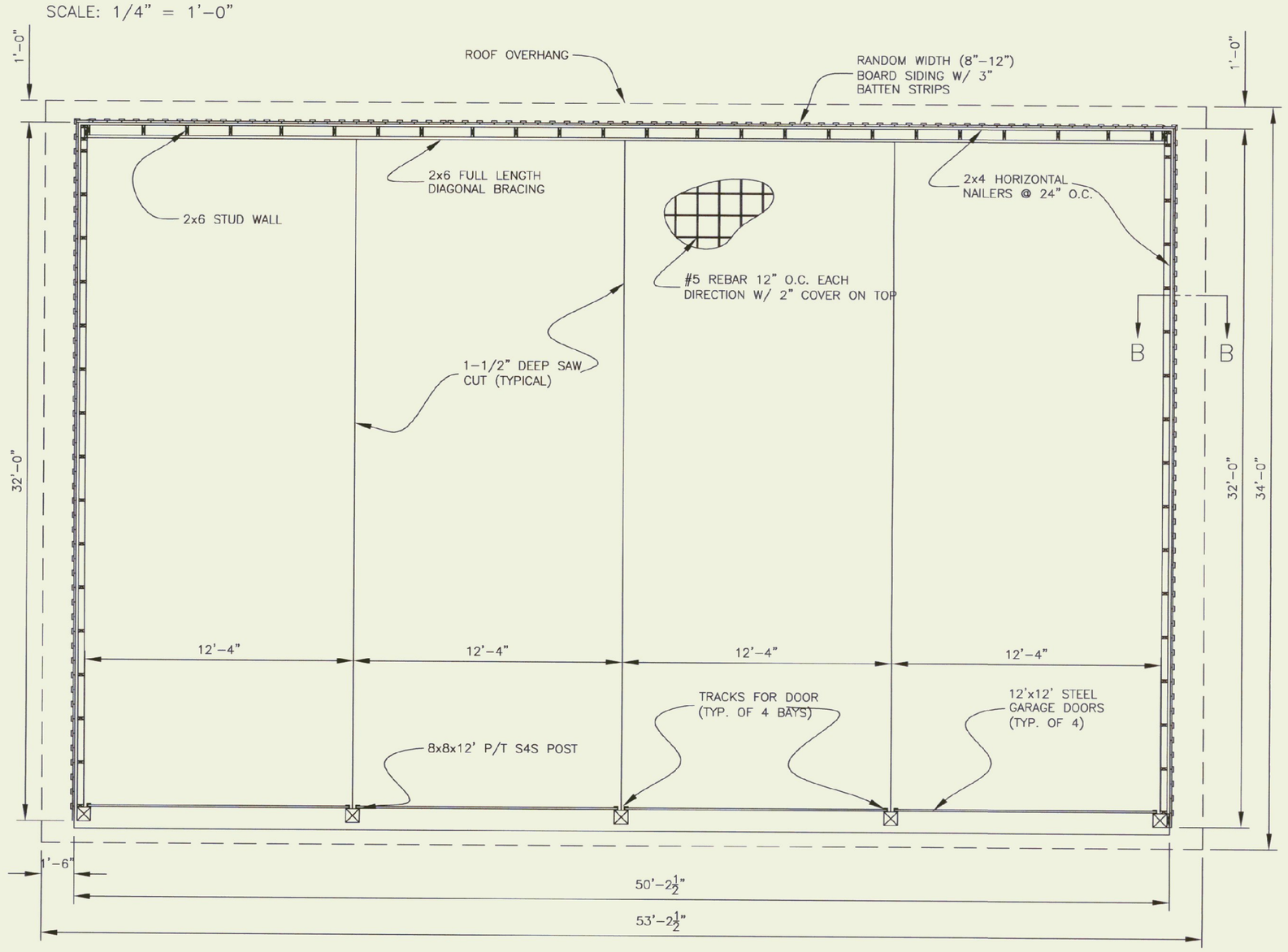

SHED PLAN

SCALE: 1/4" = 1'–0"

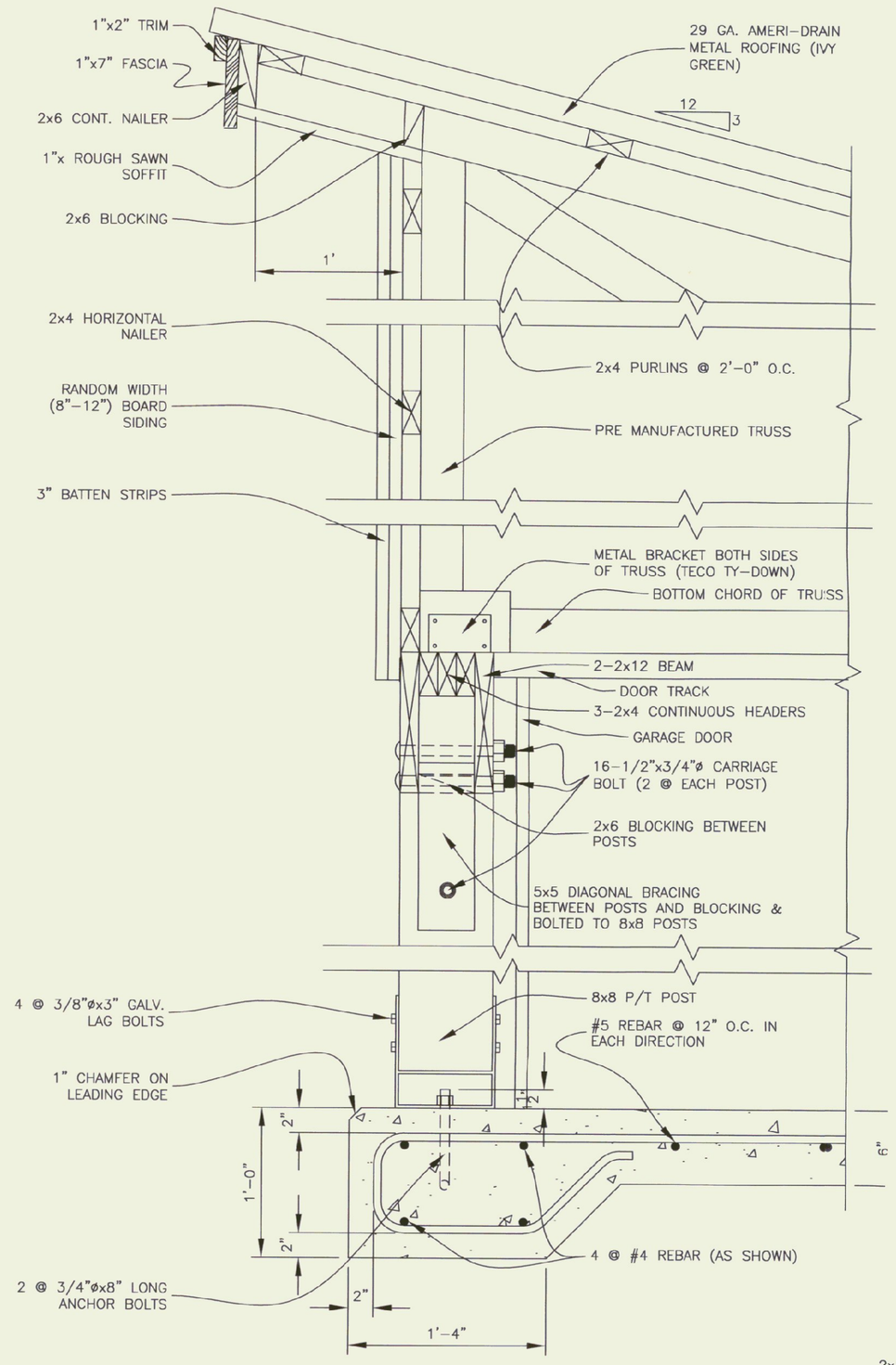

A–A / SB–1 SECTION A–A

SCALE: 1–1/2" = 1'–0"

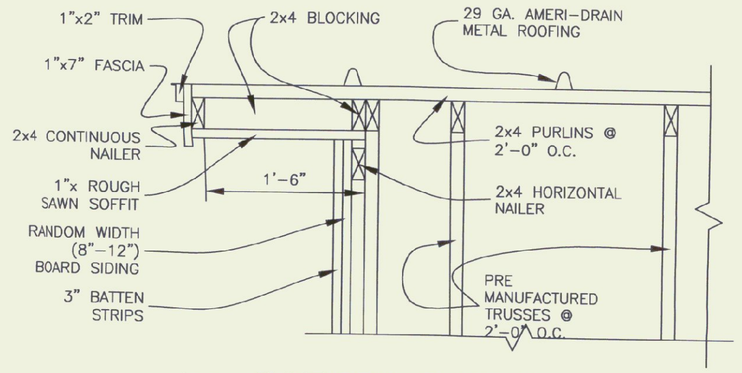

B–B / SB–1 SOFFIT DETAIL

SCALE: 1" = 1'–0"

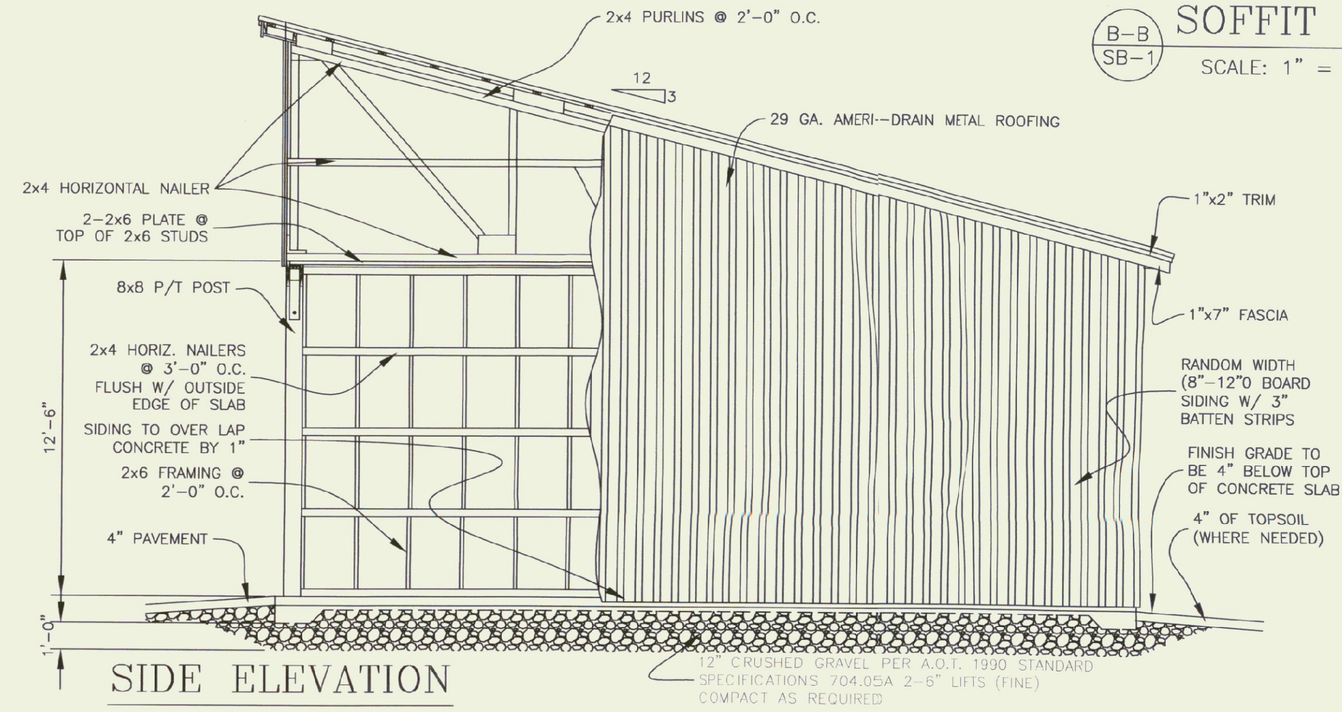

SIDE ELEVATION

SCALE: 1/4" = 1'–0"

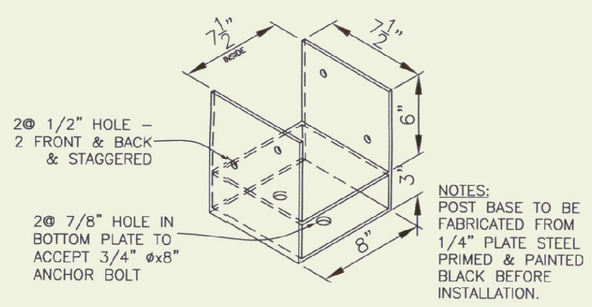

POST BASE DETAIL

SCALE: 1 1/2" = 1'–0"

GENERAL NOTES

TRUSS NOTES

TRUSS MANUFACTURER TO PROVIDE DEPT. OF STATE BUILDINGS ENGINEER A SET OF ENGINEERED & STAMPED DRAWINGS FOR APPROVAL PRIOR TO TRUSS MANUFACTURE.

TRUSS MANUFACTURER TO PROVIDE THE CONTRACTOR WITH ALL NECESSARY INSTRUCTIONS FOR PROPER TRUSS INSTALLATION, ANCHORAGE, BRACING, LIFTING, ECT.

TRUSS DESIGN LOADS IN ACCORDANCE WITH THE 1987 B.O.C.A. FOR VERMONT.

MINIMUM LOADS:
- LIVE – PER 1987 B.O.C.A. FOR VERMONT (40 PSF MIN.)
- DEAD – AS CALCULATED FROM TRUSS & ROOF MATERIAL
  - 5 PSF ON BOTTOM CORD
- WIND – 25 PSF
- DIAGONAL WIND BRACING PER TRUSS MANUFACTURE.

LUMBER NOTES:

FRAMING MEMBERS TO BE KILN DRIED CONSTRUCTION GRADE SPRUCE S4S 19% MOISTURE CONTENT.

PLATES & NAILERS IN CONTACT WITH CONCRETE TO BE CCA 0.40 TREATED

BOARD & BATTEN SIDING, TRIM, AND SOFFIT MATERIAL TO BE NATIVE ROUGH SAWN WHITE PINE, SPRUCE, EASTERN FIR OR RED PINE. BOARDS TO BE RANDOM WIDTH 8"–12" – BATTEN 3".

BOARD SIDING & BATTEN STRIPS TO BE FULL LENGTH (NO HORIZONTAL JOINTS).

ALL FASTENERS TO BE GALVANIZED AND SHALL BE APPROPRIATELY SIZED.

FINISH NOTES:

ALL BOARDS & BATTEN TO BE STAINED WITH ONE COAT (ALL SURFACES) PRIOR TO INSTALLATION. AFTER INSTALLATION EXTERIOR SIDING TO RECEIVE ONE ADDITIONAL COAT OF STAIN.

ROOFING COLOR: IVY GREEN (BY AMERI–DRAIN)

STAIN TO BE OLYMPIC OIL BASE SEMI–TRANSPARENT OXFORD BROWN #713.

CONCRETE NOTES: PER A.O.T. STANDARD.

STRENGTH: 3500 PSI

FINISH: FLOATED

CURING METHOD: PER TABLE 501.17A

DOOR NOTES:

All garage doors to be steel with acrylic finish: overhead one row of lites, 4th row

STATE OF VERMONT
Department of Buildings and General Services
Agency of Administration
Montpelier, Vermont

AGENCY OF TRANSPORTATION
LYNDONVILLE MAINTENANCE FACILITY
STORAGE SHED
LYNDONVILLE VERMONT

REVISIONS
9/1/99 BTM
10/15/99 ADW
09/05/01 BTM
08/28/02 KDR

SCALE: As Noted
DATE: SEPT. 2002
DRAWN BY: K.ROUELLE
APPR. BY: R.BARRY

A.O.T.

32' x 50' STORAGE SHED

LYNDONVILLE

A–1

1 OF 1