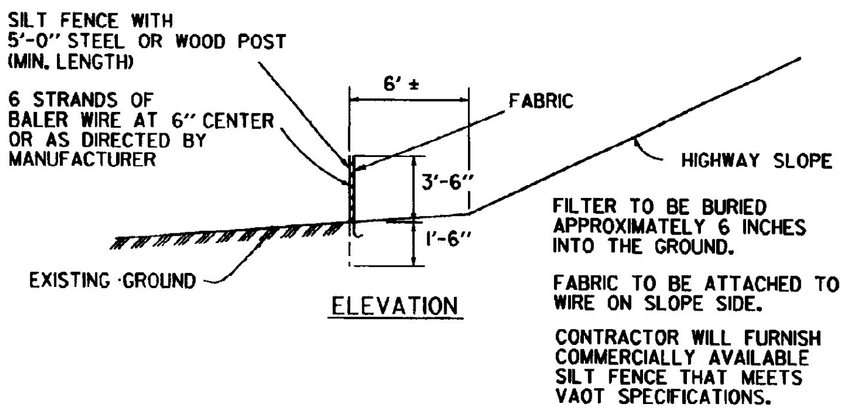

ELEVATION

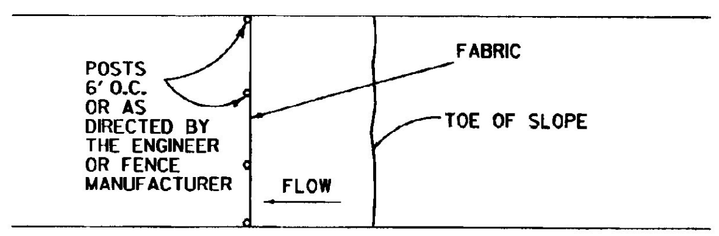

PLAN

SILT FENCE

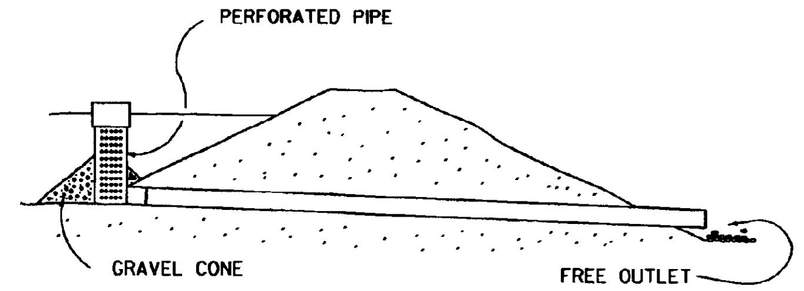

LARGE - PERMANENT INSTALLATION
PIPE RISER - STONE OUTLET

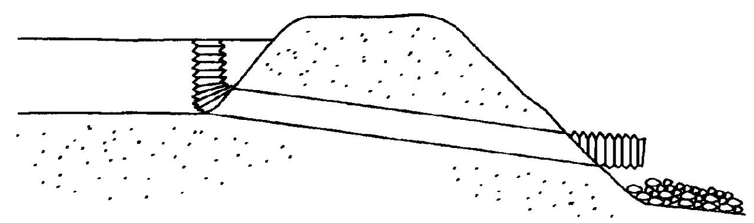

SMALL - TEMPORARY INSTALLATION
ACCM PIPE WITH RISER - STONE OUTLET

SEDIMENT DAMS

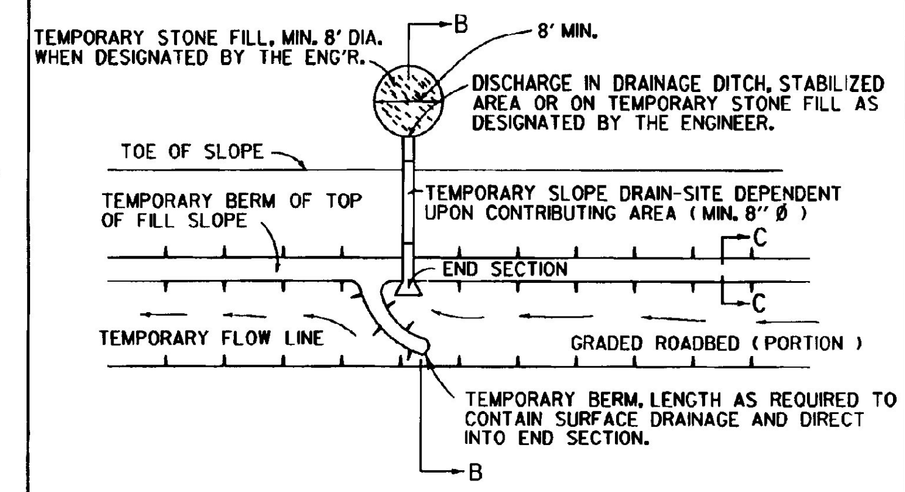

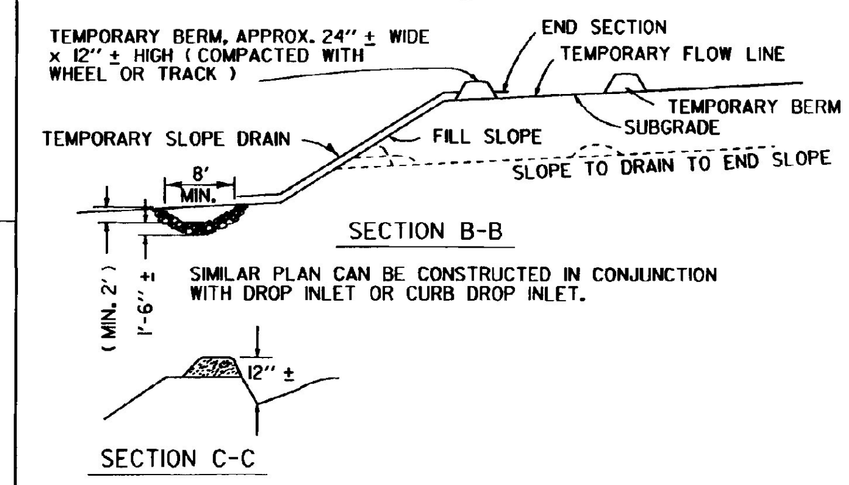

TEMPORARY BERMS AND SLOPE DRAINS
FOR FILL SLOPES

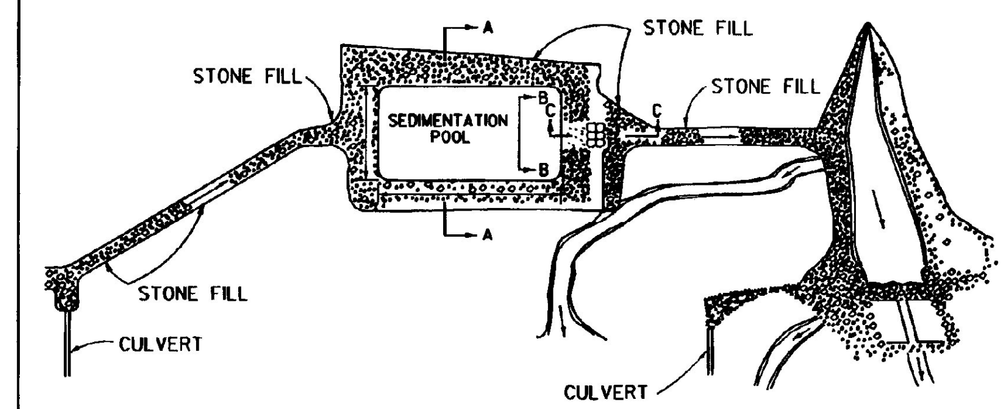

SEDIMENTATION POOL

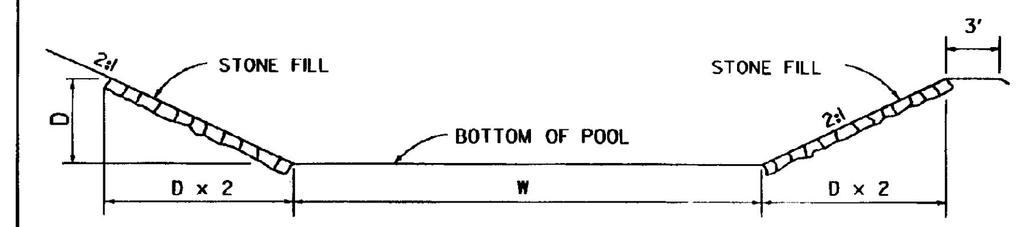

SECTION A-A

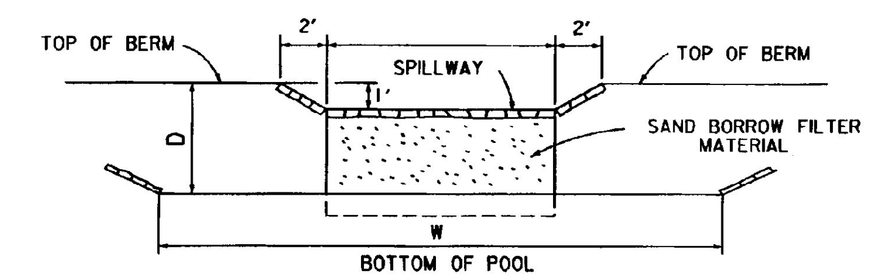

DETAILS OF SPILLWAY TO BE DETERMINED BY HYDRAULIC SECTION.

SECTION B-B

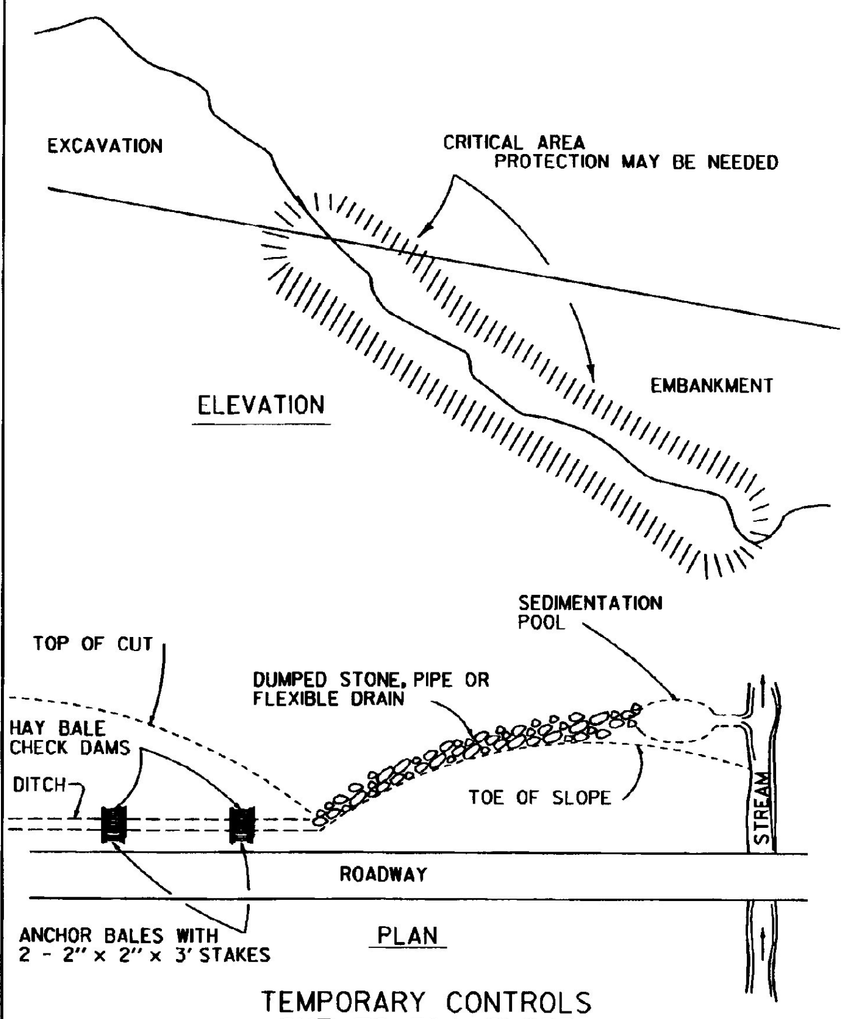

TEMPORARY CONTROLS
CUT TO FILL SLOPE

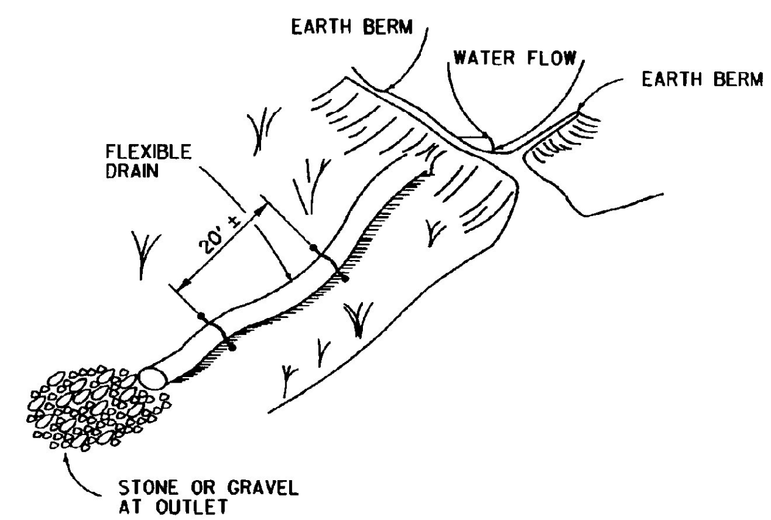

TEMPORARY FLEXIBLE SLOPE DRAIN

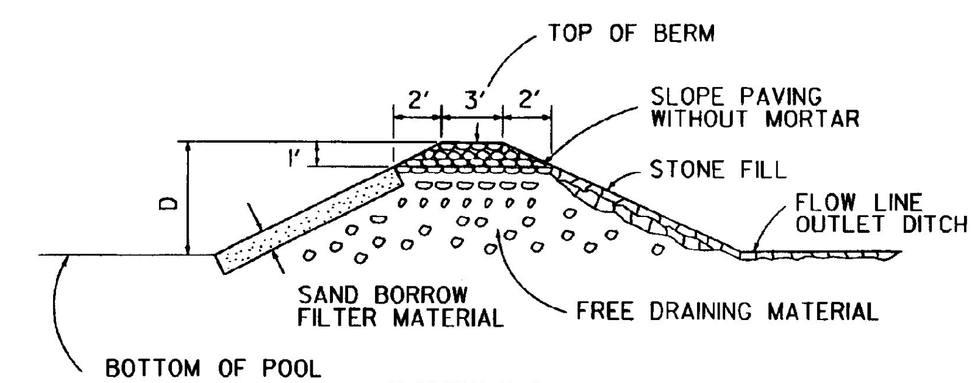

SECTION C-C

REVISIONS AND CORRECTIONS

JUL. 5, 1972 - ORIGINAL APPROVAL
JUN. 14, 1973 - SEDIMENT TRAPS REMOVED FROM TEMPORARY BERMS & SLOPE DRAINS FOR FILL SLOPES
FEB. 26, 1976 - SILT FENCE ADDED
DEC. 7, 1976 - HAY BALE ANCHOR NOTE ADDED
JUN. 1, 1994 - SILT FENCE NOTES AND DIMENSIONS CHANGED

APPROVED

APPROVED FOR THIS PROJECT AND/OR DESIGN IMPLEMENTATION. FHWA FINAL APPROVAL PENDING.

DIRECTOR OF ENGINEERING

DESIGN ENGINEER

TEMPORARY EROSION CONTROL DETAILS

VERMONT AGENCY OF TRANSPORTATION

STANDARD
T-1