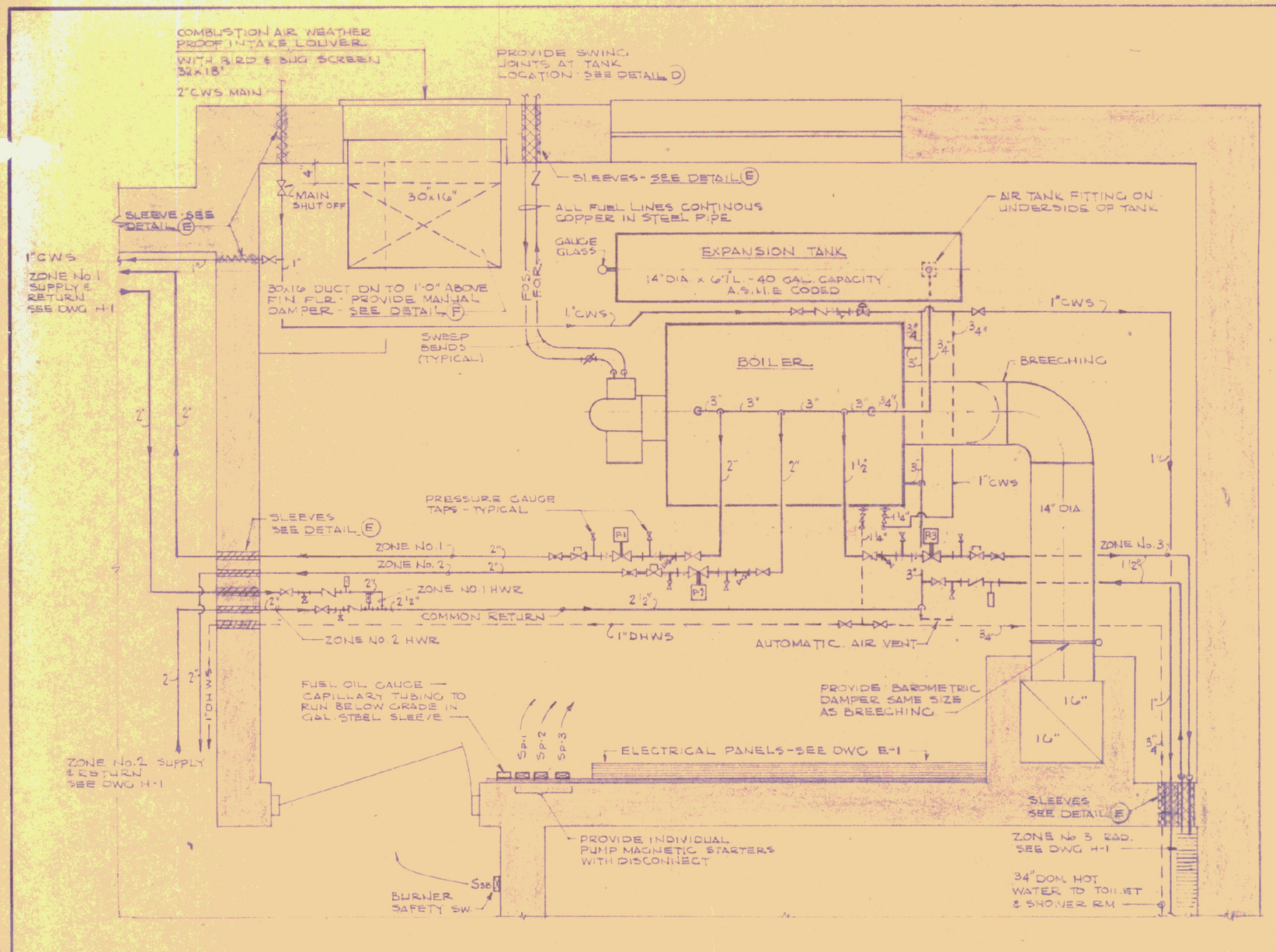

BOILER RM FLOOR PLAN

SCALE: 3/4" = 1'-0"

NOTE: WHEN ALTERNATE #1 (CONC. DOUBLE TEE ROOF) IS USE THE CHIMNEY WILL BE CONSTRUCTED ON THE EXTERIOR BUILDING WALL. MECHANICAL CONTRACTOR SHALL MAKE ALL NECESSARY ADJUSTMENTS TO THE BREECHING, PIPING ETC. TO ACCOMODATE THIS CHANGE.

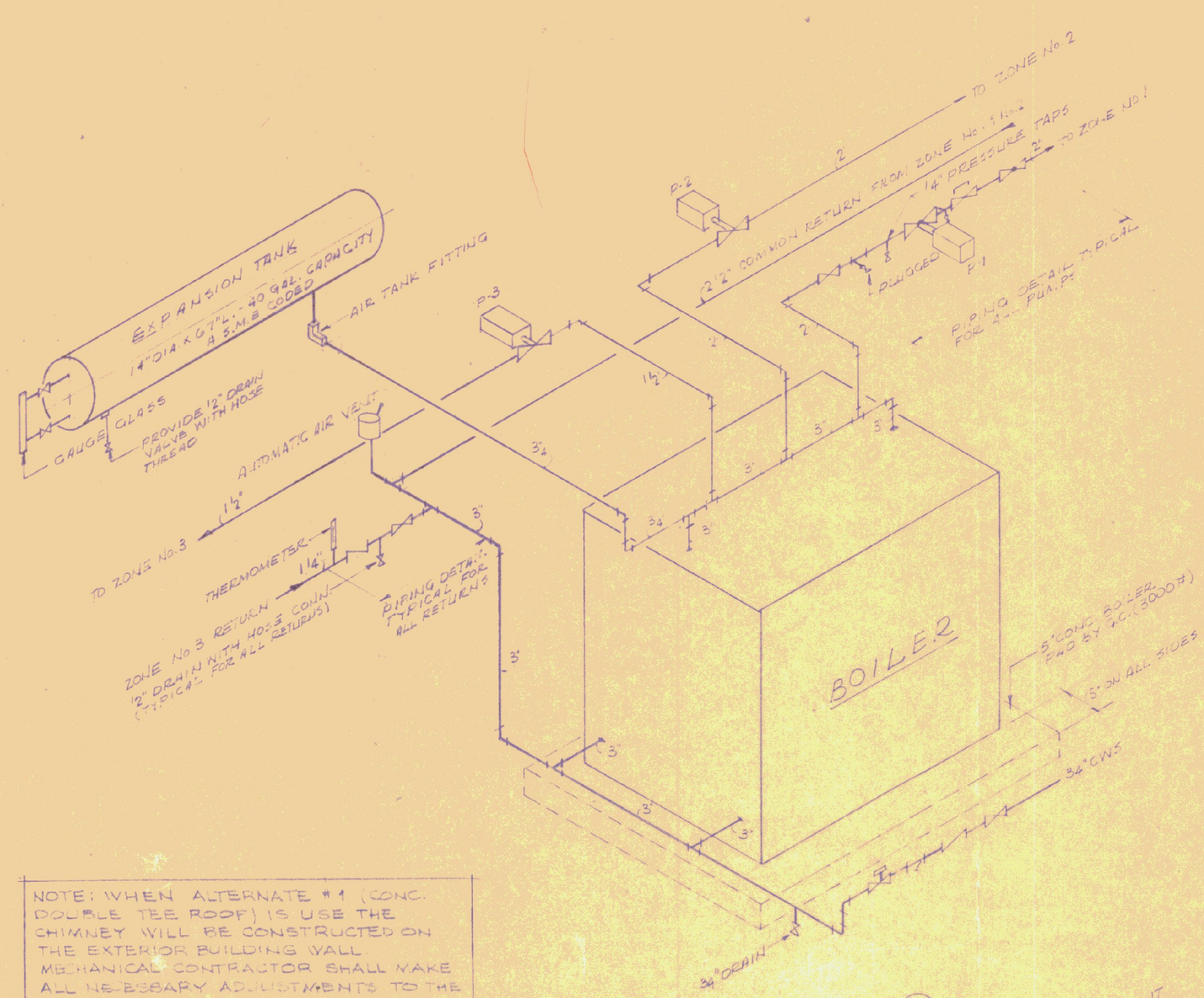

BOILER PIPING DETAIL (A)

N.T.S.

GENERAL NOTES

1. CONTRACTOR SHALL SUBMIT DATA & CUTS OF EQUIPMENT FOR APPROVAL PRIOR TO ORDERING MATERIAL.
2. ALL PIPING IS SCHEMATIC, CONTRACTOR SHALL CO-ORDINATE HIS WORK WITH OTHER TRADES.
3. MOTORS ON ALL NEW UNIT HEATERS SHALL BE TOTALLY ENCLOSED FRAME CONSTRUCTION WITH PERMANENTLY LUBRICATED BEARINGS & BUILT-IN THERMAL OVERLOAD PROTECTION.
4. HEATING CONTRACTOR SHALL PROVIDE SERVICE SWITCH AT EACH UNIT HEATER.
5. SEE SITE PLAN FOR LOCATION OF BURIED OIL TANK.
6. ALL WATER SUPPLY PIPING ABOVE FLOOR SLAB ELEVATION SHALL BE INSULATED. INSULATION SHALL BE PAINTED.
7. ALL HEATING PIPING IN THE BOILER RM. MAIN BUILDING & THRU SLEEVES SHALL BE INSULATED AND THE INSULATION PAINTED.
8. EACH CIRCULATING PUMP SHALL HAVE BUILT-IN THERMAL OVERLOAD PROTECTION.
9. EACH U.H. SHALL HAVE AN AQUASTAT CONTROL TO PREVENT THE FAN FROM OPERATING BELOW A PREDETERMINED HWR TEMP. TO PREVENT COLD AIR CIRCULATION WITHIN THE BUILDING. T'STATS SHALL SWITCH FANS OFF WHEN HEAT DEMAND IS SATISFIED
10. ALL PUMPS SHALL BE RATED TO OPERATE ON 120/240V 1 PH/ 3W UNLESS OTHERWISE SPECIFIED OR INDICATED.
11. PROVIDE ONE OIL BURNER SAFETY SWITCH OUTSIDE OF BOILER RM DOOR.
12. PROVIDE ONE OIL BURNER SAFETY SWITCH AT MAIN ENTRANCE OF MAIN BUILDING AT MAN DOOR.
13. BOILER RM. FINISHED FLOOR TO BE SAME ELEV. AS MAIN BUILDING FLOOR, BUT SHALL BE PITCHED TOWARD DRAIN.
14. CONCRETE BOILER PAD SHALL BE LEVEL (BY G.C.)
15. PIPING FOR FUEL OIL SUPPLY AND RETURN, OIL FILL AND VENT SHALL BE SCHEDULE 40 BLACK STEEL ASTM A-120 W/MALLEABLE IRON SCREWED FITTINGS.
16. HEATING CONTRACTOR SHALL SET SLEEVES AND HANGER SUPPORTS IN BOILER RM CONCRETE ROOF SLAB BEFORE POURING OF SLAB. ALL OPENINGS THRU CONCRETE ROOF SLAB AND WALLS SHALL BE SEALED AFTER PIPING IS INSTALLED.

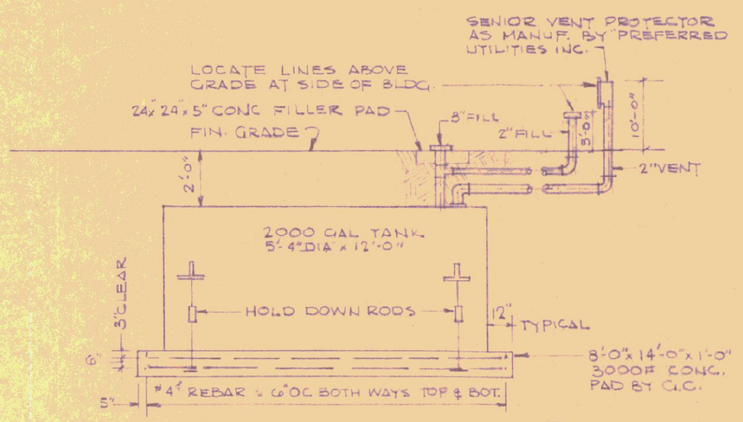

FUEL OIL TANK PAD DETAIL (D)

SCALE: 1/4" = 1'-0"

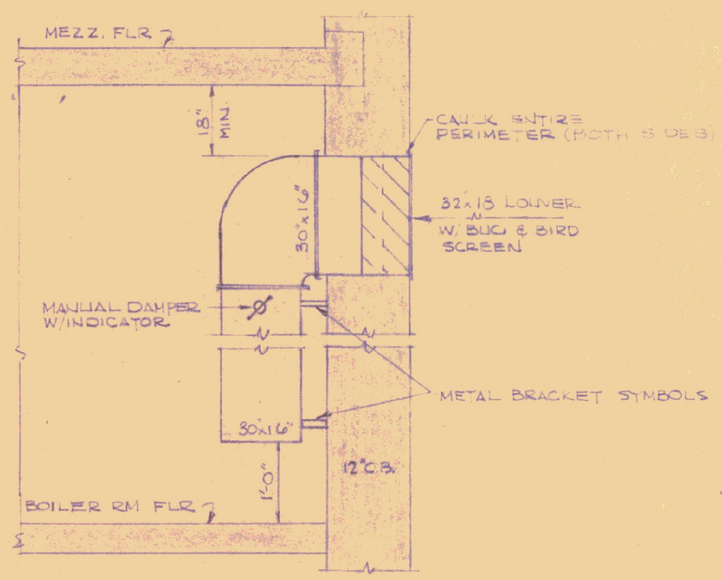

INTAKE LOUVER DETAIL (F)

SCALE: 3/4" = 1'-0"

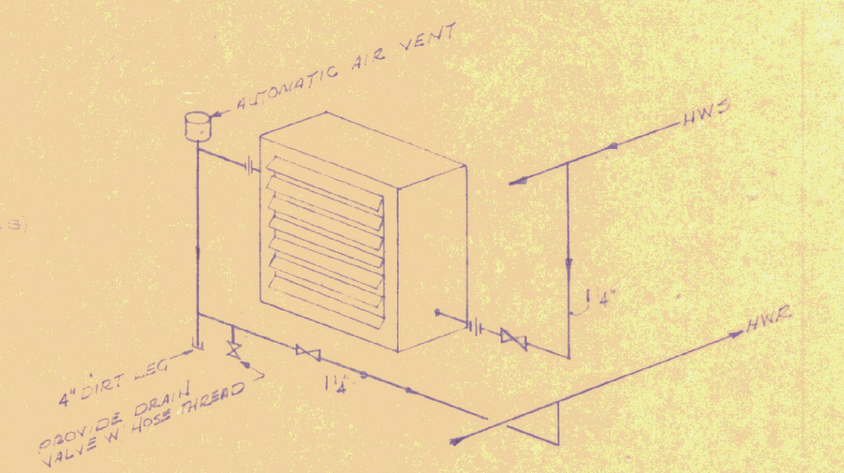

HORIZONTAL UNIT HEATER DETAIL (B)

N.T.S.

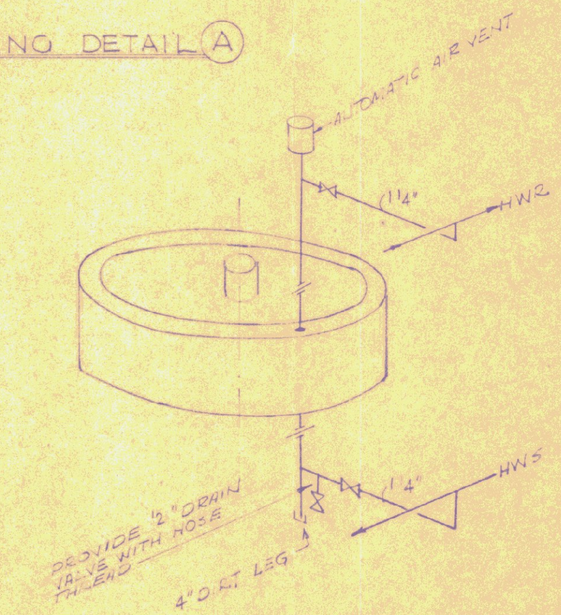

VERTICAL UNIT HEATER DETAIL (C)

N.T.S.

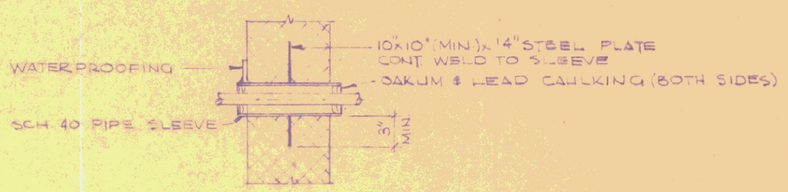

SLEEVE DETAIL (E)

SCALE: 3/4" = 1'-0"

HEATING EQUIPMENT SCHEDULE

(RATINGS @ 190° A.W.T. W/ 20° DIFFERENTIAL)

MARK	TYPE	MANUFACT.	MODEL	MBH	HP	DISCHARGE	RPM	CFM	REMARKS
HUH 1-3	UNIT HEATER	MODINE	HS-535	100	1/4	HORIZ.	1075	2090	WITH HORIZ. DEFLECTOR BLADES (ADJUSTABLE)
VUH 1-3	UNIT HEATER	MODINE	V-810	145	1/4	VERTICAL	1075	3530	WITH CONB. WET CAPILLISTOL
P-1	IN-LINE	BELL & GOSSETT	60-2AA	40 GPM	3/8	5 1/4" IMP.	1725	25' HD	
P-2	IN-LINE	BELL & GOSSETT	60-2AA	80 GPM	3/4	5 1/4" IMP.	1725	25' HD	
P-3	IN-LINE	BELL & GOSSETT	60-1 1/2AA	25 GPM	1/2	5 1/4" IMP	1725	25' HD	
RAD	STERLING STILER VERSA-LINE	STERLING	5-144	1.02					1 1/4" IPS STEEL T BE W. 4 4x4 4 STEEL FINS 40 FINS PER FT

REVISIONS	DATE	REVISION

STATE OF VERMONT
DIVISION OF STATE BUILDINGS
AGENCY OF ADMINISTRATION
MONTPELIER. VERMONT

Standard Highway Garage Building
BOILER ROOM
FLOOR PLAN & SELECTED DETAILS
SCALE: As noted

DATE: 10-18-74	DESIGNED BY: GUS MASTRO	DWG. NO. H 2
DRAWN BY: STUDIO SEVEN INC	APPROVED BY:	2 OF 2