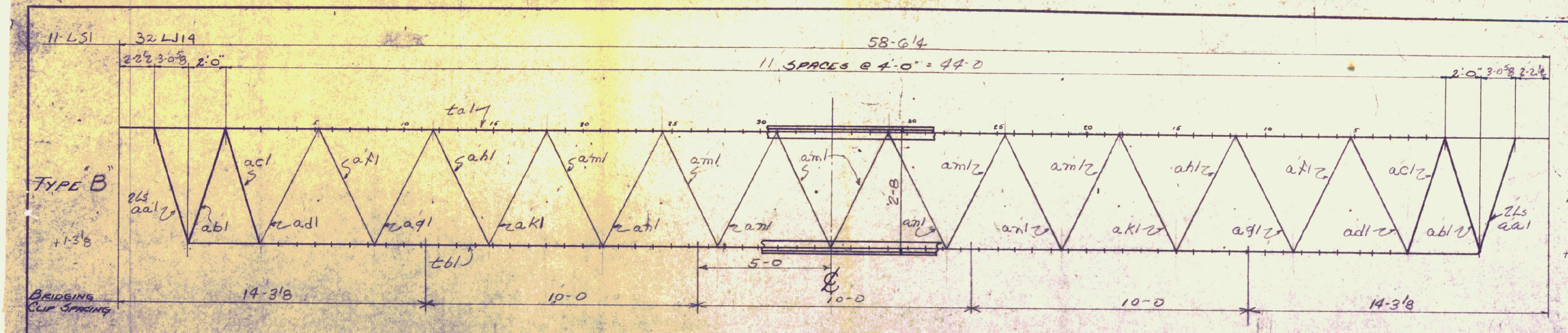

NOTE
ALL WELDS TO BE 3/16 FILLET WELDS TOTAL LENGH AS INDICATED BELOW FOR EACH END OF DIAGONAL
ALL DIAGONALS MARK UNLESS NOTED OTHERWISE

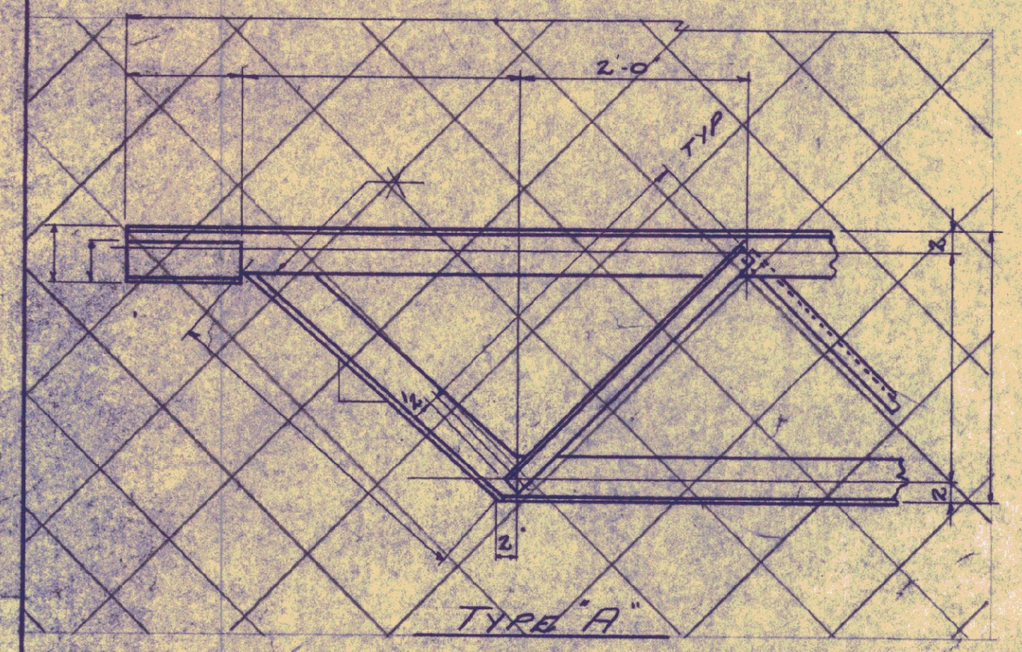

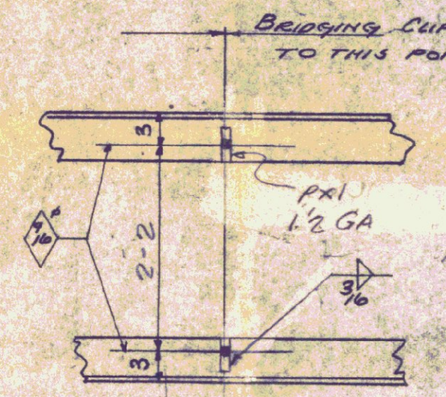

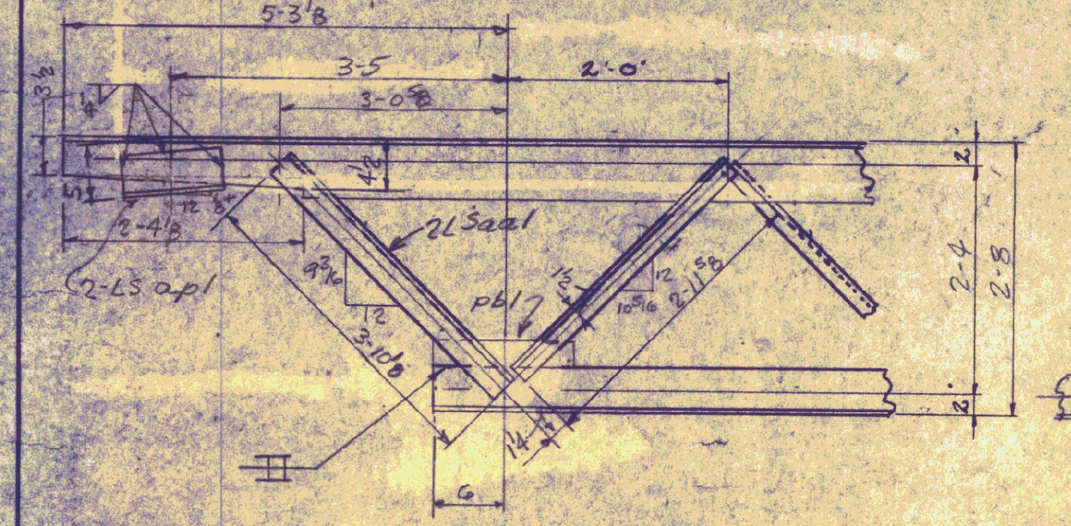

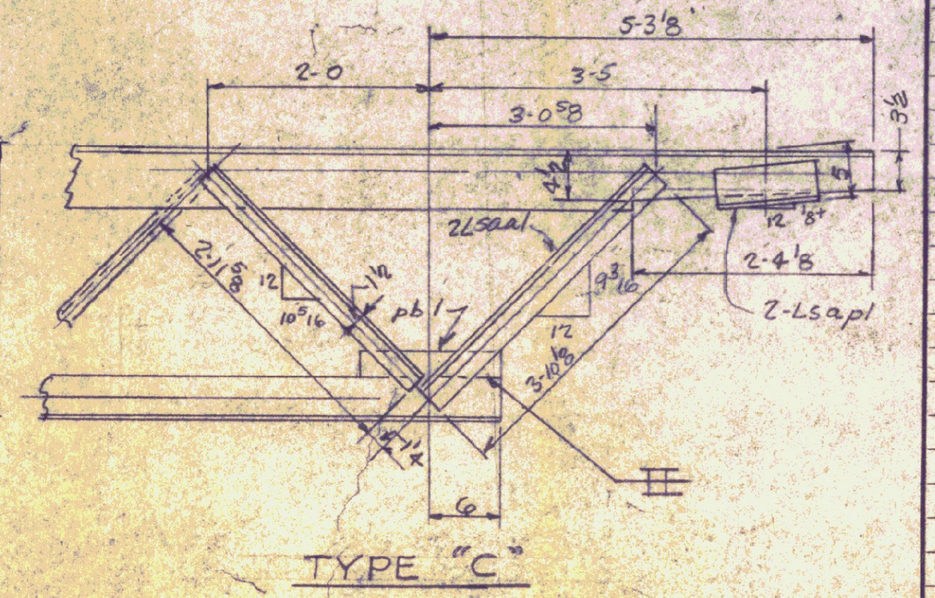

2-4	.36798		5.4444
3-0⅝	.48469		9.3152
	9.88338		14.7596
9 3/16/12			3'-10⅛

32 LJ 14 ASTM A36 BILL OF MATERIAL

LEGH OF WELD	NO. PIECES	MARK	DESCRIPTION	LENGTH FT.	LENGTH IN.		WEIGHT
			11-LONG SPANS - LS1				
	11	ta1	ST. 7 WF 17	58	6¼	RES @ 60-0	
	11	tb1	ST. 4 WF 15.5	49	0	ORD.	
5	44	ac1	L 3 x 2 x 3/16	3	10⅛	ORD.	
9	22	ab1	L 3½ x 3½ x 5/16	2	11⅝	RES @ 20-0	
7	22	ac1	L 1¾ x 1¾ x ¼	3	1⅜	RES @ 20-0	
7	22	ad1	L 3 x 3 x 5/16	3	1⅜	RES @ 20-0	
6	22	ae1	L 2 x 2 x 3/16	3	1⅜	RES @ 20-0	
6	22	af1	L 3 x 3 x ¼	3	1⅜	ORD.	
4	22	ah1	L 1½ x 1½ x 3/16	3	1⅜	RES @ 20-0	
4	22	ak1	L 2 x 2 x 5/16	3	1⅜	RES @ 20-0	
3	66	am1	L 1¼ x 1¼ x 3/16	3	1⅜	RES @ 20-0	
3	44	an1	L 2 x 2 x 3/16	3	1⅜	RES @ 20-0	
	44	ap1	L 4 x 4 x ⅜	0	6	STK	
	176	px1	BAR 2 x ¼	0	2	STK	
	22	pb1	BAR 2 x ¼	1	0	STK	

VERMONT STATE BUILDINGS DIVISION
MONTPELIER, VERMONT
☑ APPROVED
☐ APPROVED AS CORRECTED
☐ NOT APPROVED
☐ RESUBMIT
Shop drawings submitted pursuant to and in accordance with the requirements of the contract. Review is for general arrangement only. Contractor is responsible for dimensions, quantities, and compliance with the contract. Comments, if any, are attached.
BY RAH
DATE 11/27/67

This is an exposed structural member & must be finished as such. All welds to be ground smooth, all paint to be free from drips, runs & sags.

REV. LST. 11-1-67 HPTL

VERMONT STRUCTURAL STEEL CORP.
BURLINGTON, VT.

		DATE
DRAWN BY	Zack	10-24-67
CK'D BY		
HOLES	As Noted	
RIVETS		
PAINT	RUSTOLEUM	
SHOP COAT	#960	

PROJECT	VT. HIGHWAY GARAGE
LOCATION	MORRISVILLE, VT.
CUSTOMER	TRAHAN CONST. CO.
ARCHITECT	VT. DEPT. OF HIGHWAYS STATE BLDG. DIV.
JOB NO.	67-1426-11
SHEET NO.	J1

PRINT RECORD		
NO.	FOR	DATE
4	APP	10/31
8	APP SHOP	11-1