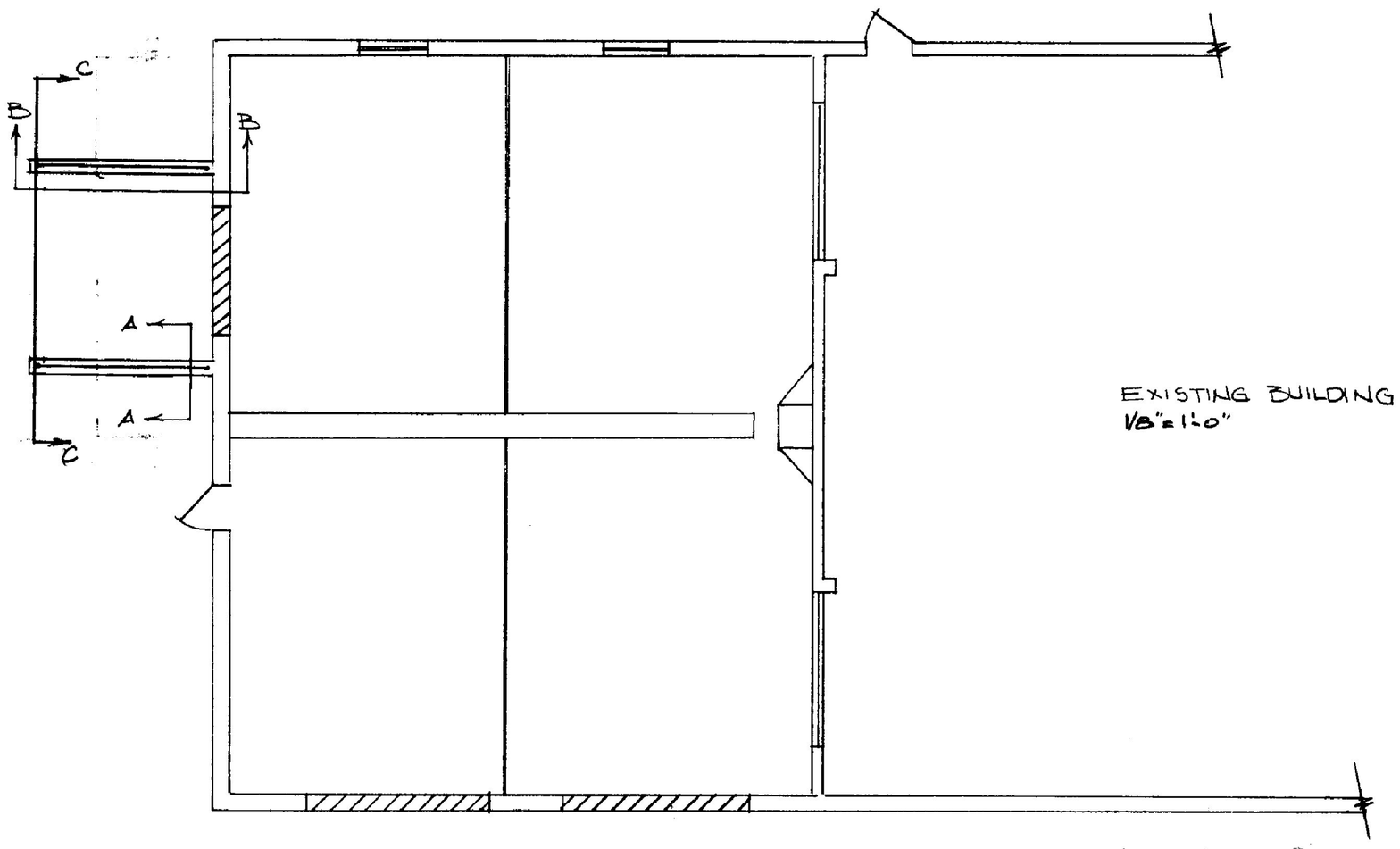

EXISTING BUILDING
1/8"=1'-0"

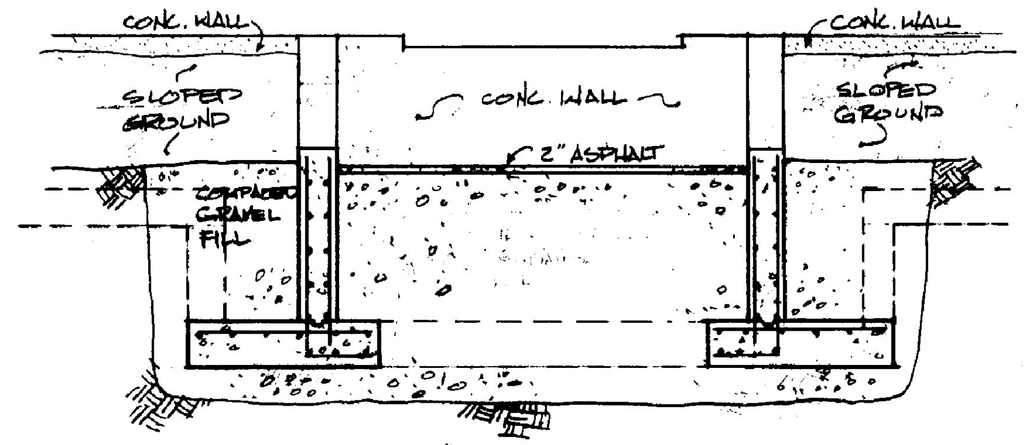

SECTION C-C
1/4"=1'-0"

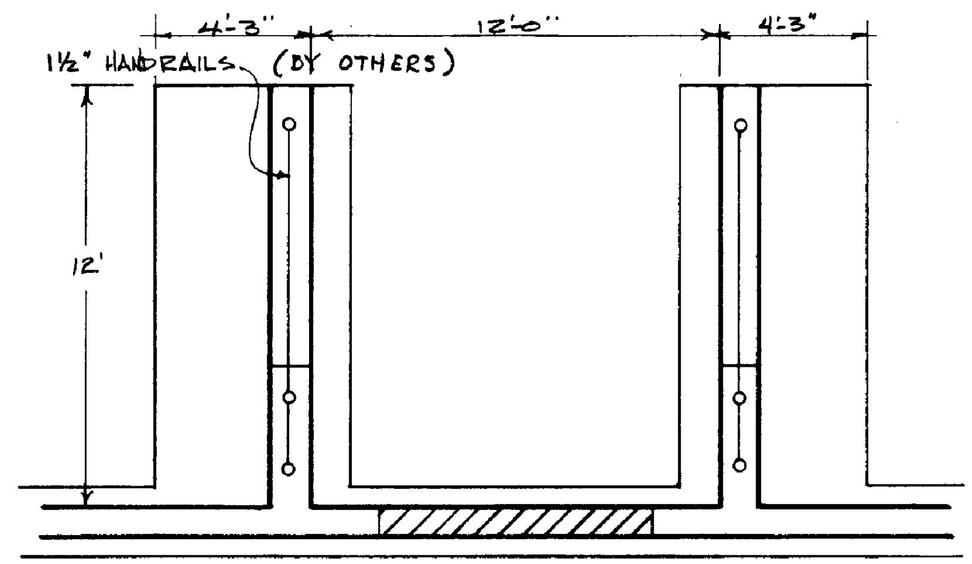

PLAN VIEW OF LOADING DOCK
SCALE: 1/4"=1'-0"

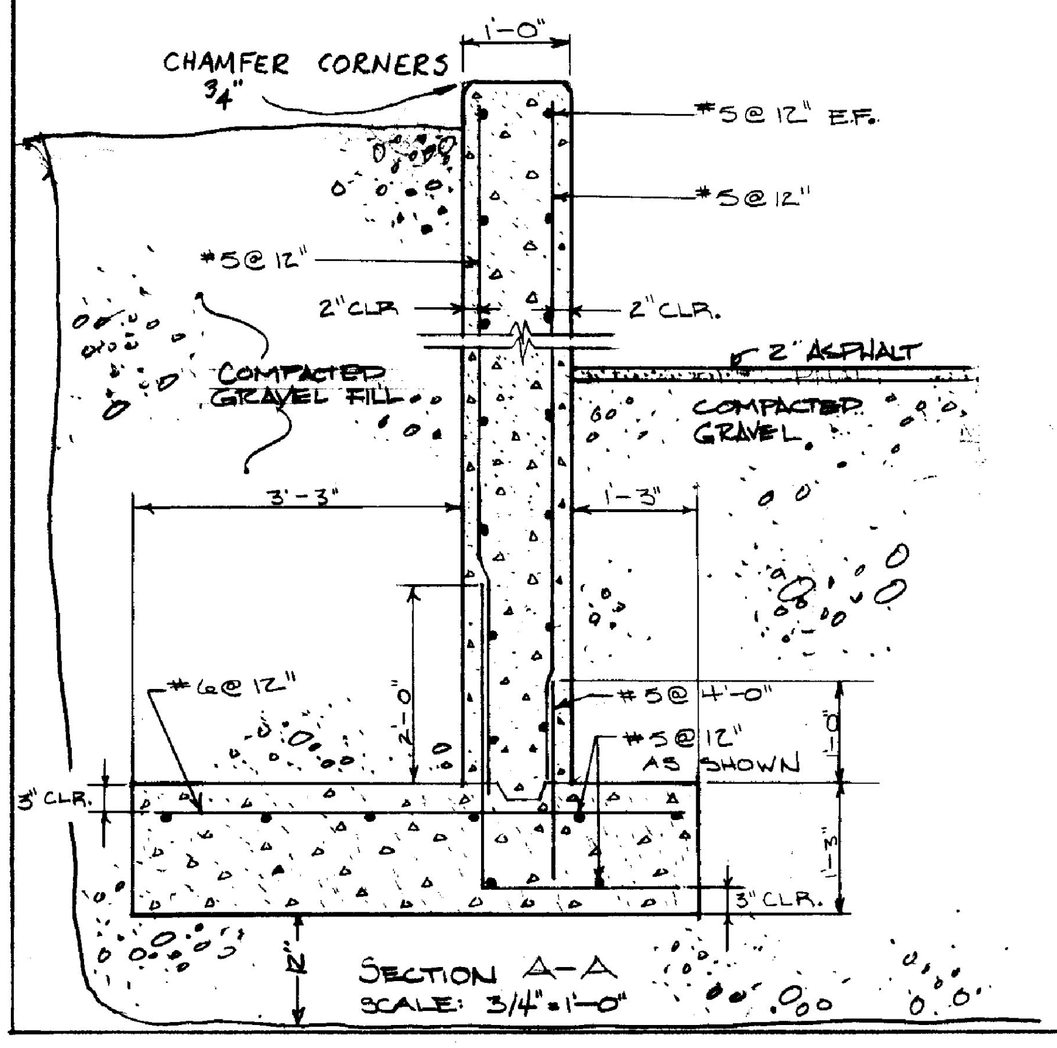

SECTION A-A
SCALE: 3/4"=1'-0"

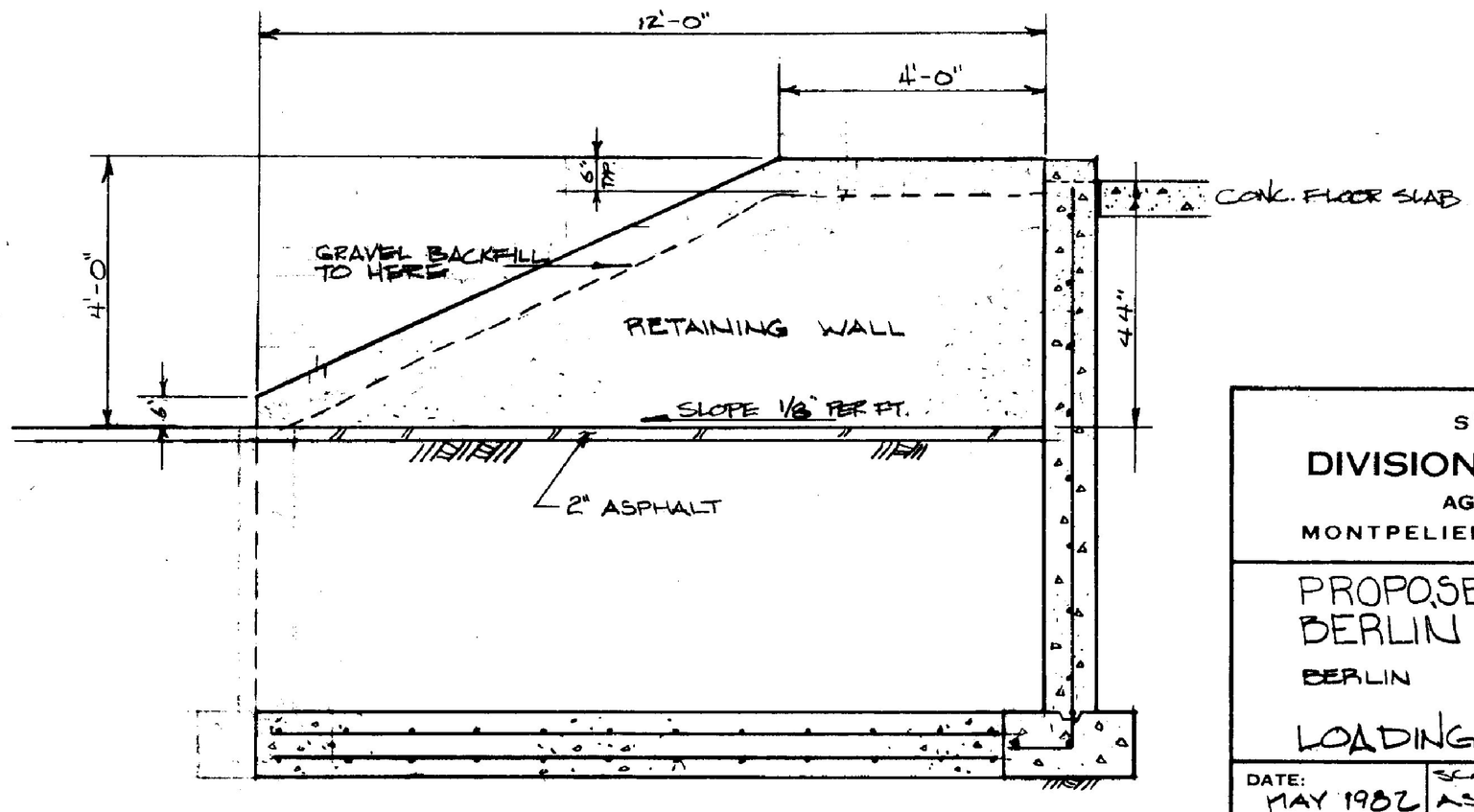

SECTION B-B
SCALE: 1/2"=1'-0"

STATE OF VERMONT
DIVISION OF STATE BUILDINGS
AGENCY OF ADMINISTRATION
MONTPELIER, VERMONT

PROPOSED ADDITION
BERLIN TRAFFIC SHOP
BERLIN VERMONT

LOADING DOCK DETAILS

STATE OF VERMONT · JAMES A. RICHARDSON NO. 2897 · REGISTERED PROFESSIONAL ENGINEER

DATE: MAY 1982	SCALE: AS NOTED	REVISIONS: JUNE 1982 SAR	DWG. NO. A-4
DRAWN BY: MJG	APPROVED BY: F. PEATT		5 OF 6