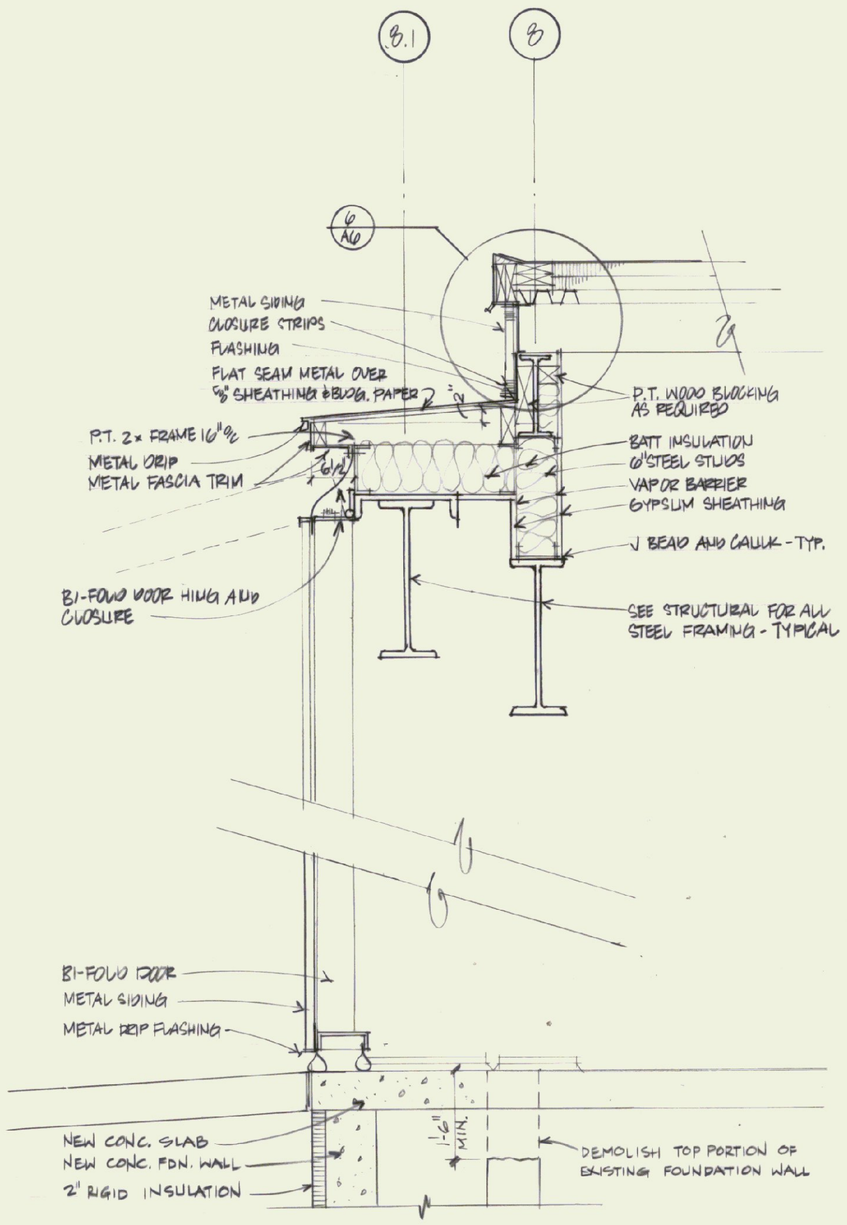

1 SECTION AT BI-FOLD DOOR
3/4" = 1'-0"

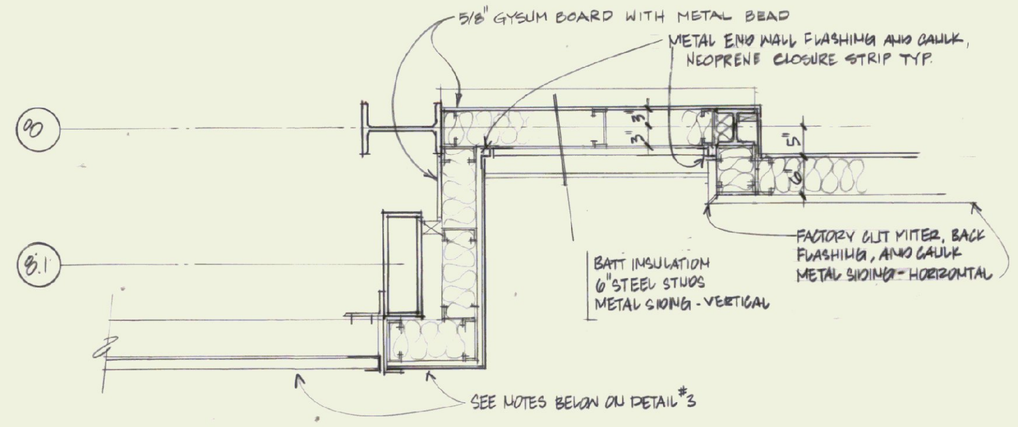

2 PLAN DETAIL AT BI-FOLD DOOR JAMB
3/4" = 1'-0"

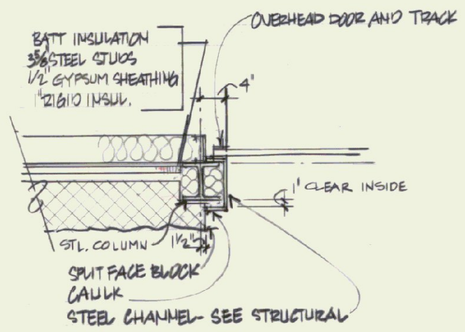

4 OVERHEAD DOOR JAMB
3/4" = 1'-0"

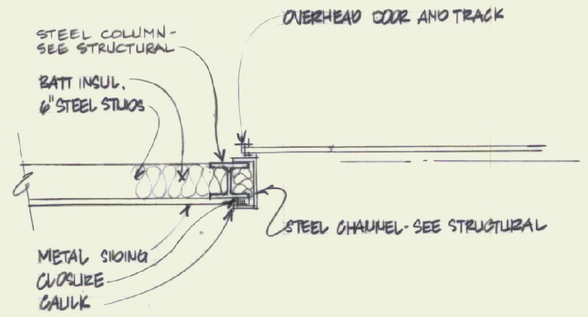

5 OVERHEAD DOOR JAMB
3/4" = 1'-0"

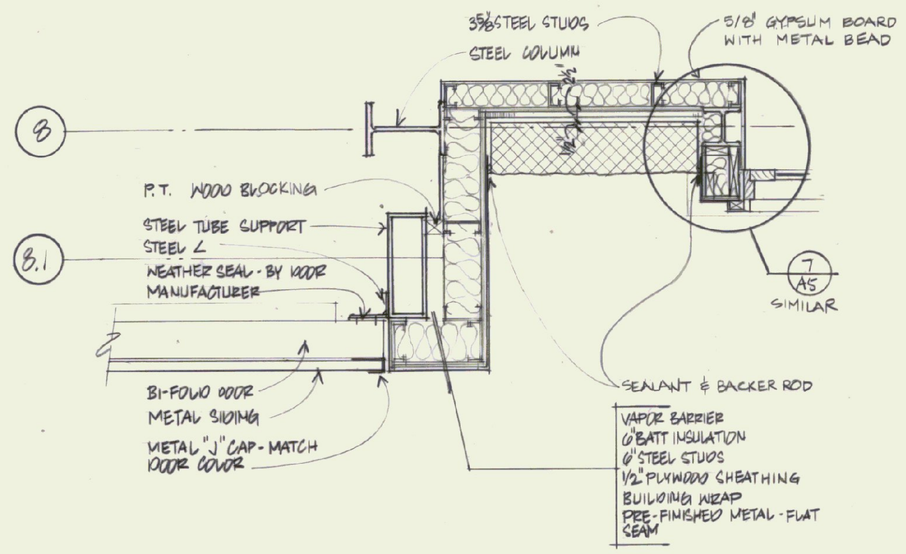

3 PLAN DETAIL AT BI-FOLD DOOR JAMB
3/4" = 1'-0"

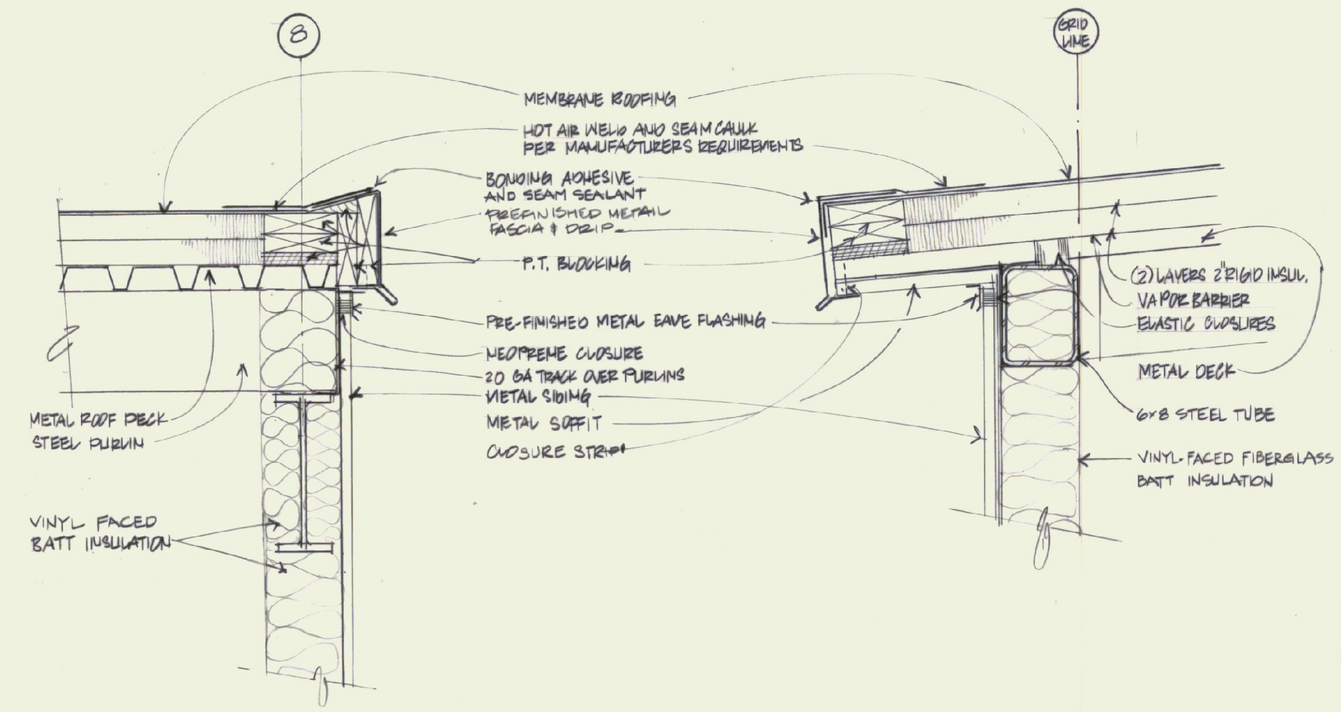

6 RAKE DETAIL
1 1/2" = 1'-0"

7 EAVE DETAIL
1 1/2" = 1'-0"

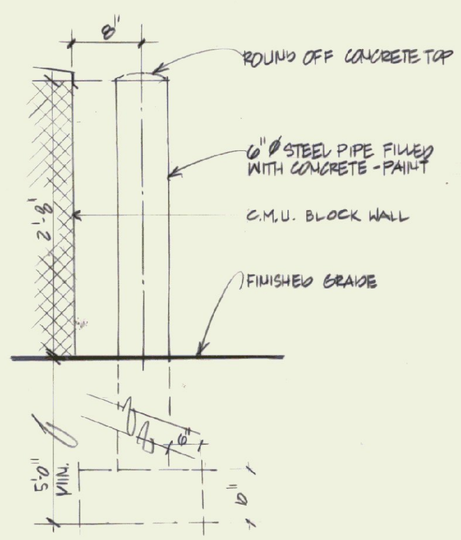

8 BOLLARD
1" = 1'-0"

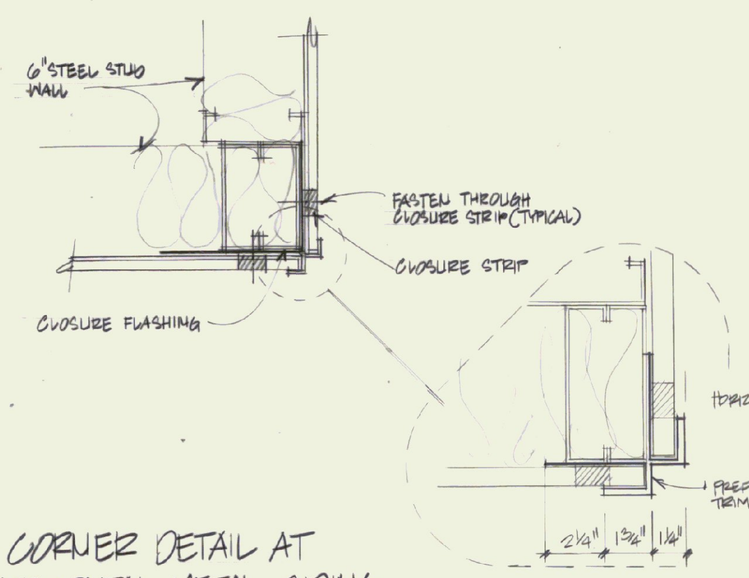

9 CORNER DETAIL AT HORIZONTAL METAL SIDING
N.T.S.

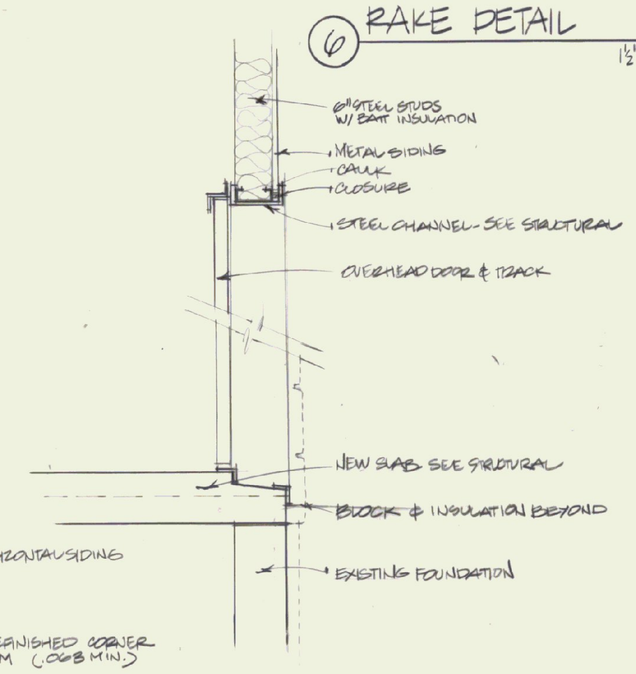

10 OVERHEAD DOOR HEAD & SILL
3/16" = 1'-0"

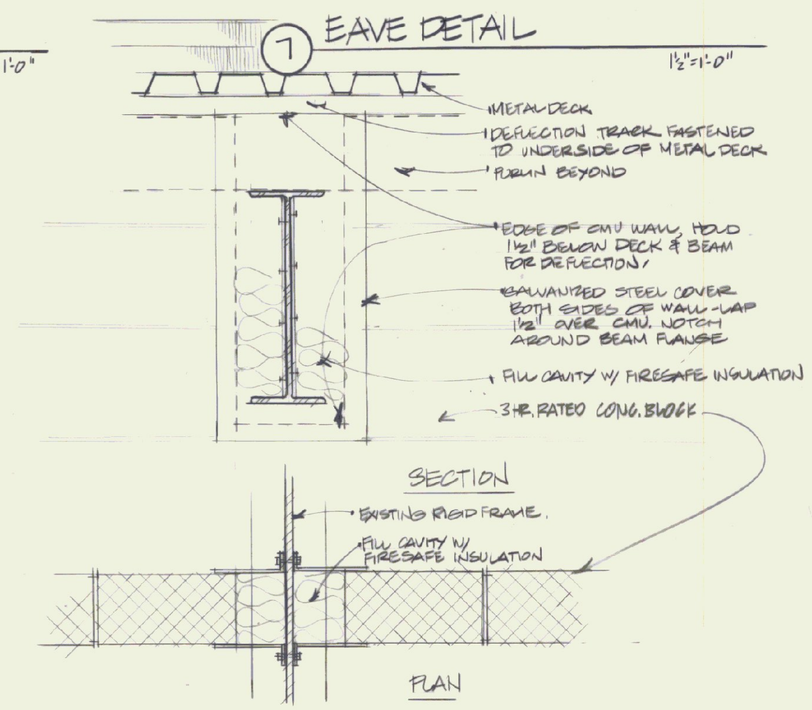

11 DETAIL @ 3 HR. FIRE WALL - RIGID FRAME
1 1/2" = 1'-0"

Gossens Bachman
Architecture and Interior Design

Gossens Bachman, Inc.
18 Langdon Street
Montpelier, Vermont 05602
(802) 229-1664

LICENSED ARCHITECT GREGG E. GOSSENS No. 1367 STATE OF VERMONT

Project Title:

Agency of Transportation:
HUNTINGTON HANGAR
Berlin, Vermont

AIR - 04 - 3076

Revisions:

1. 7/7/95 REVISED DET'L.10 TO ADD T&G PLYWOOD
2. 11/2/95 MISC. INS. & CLOSURE STRIP DETAILS; REPLACED DET'L.10; ADDED DETAIL 11.

Job Number:	9112
Drawn By:	GG
Checked By:	GG
Scale:	as noted
Date:	NOV. 11, 1992

Sheet Title:

Details

Sheet Number:

A6

© Gossens Bachman, Inc.