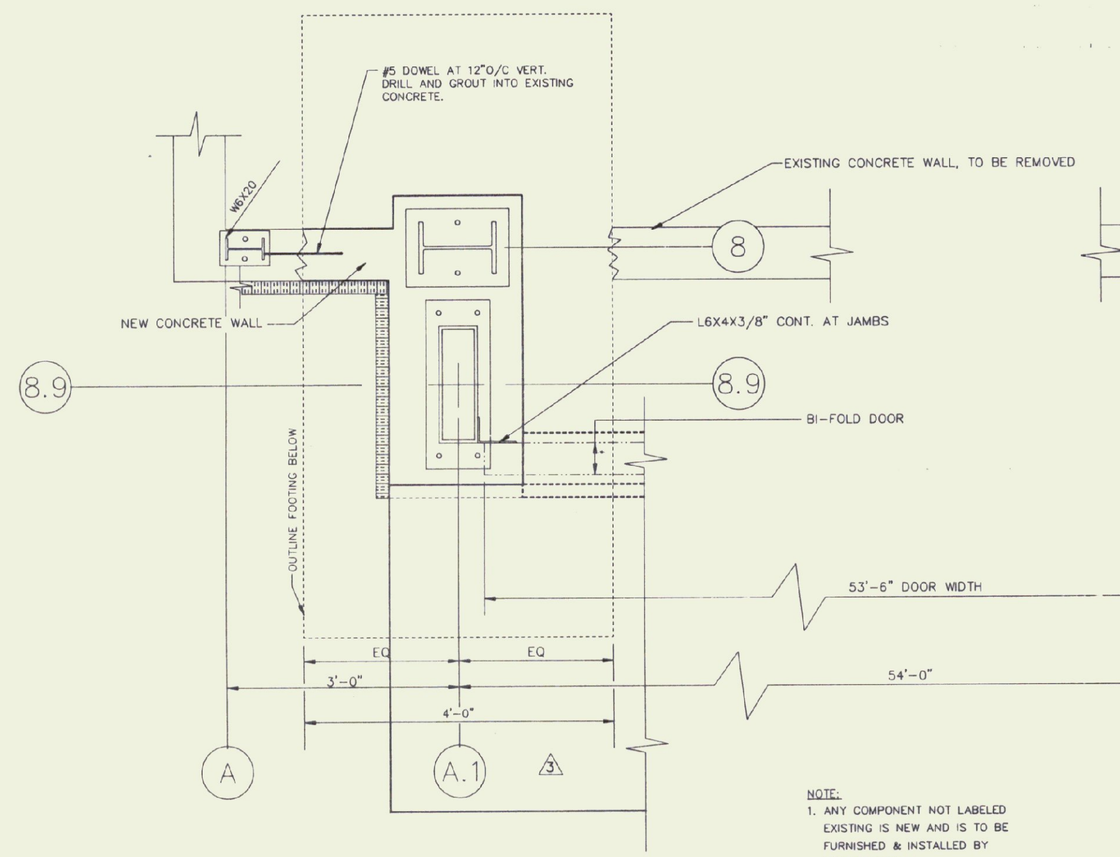

DETAIL G/S1
SCALE: 3/4"=1'-0"

NOTE:
1. ANY COMPONENT NOT LABELED EXISTING IS NEW AND IS TO BE FURNISHED & INSTALLED BY CONTRACTOR.

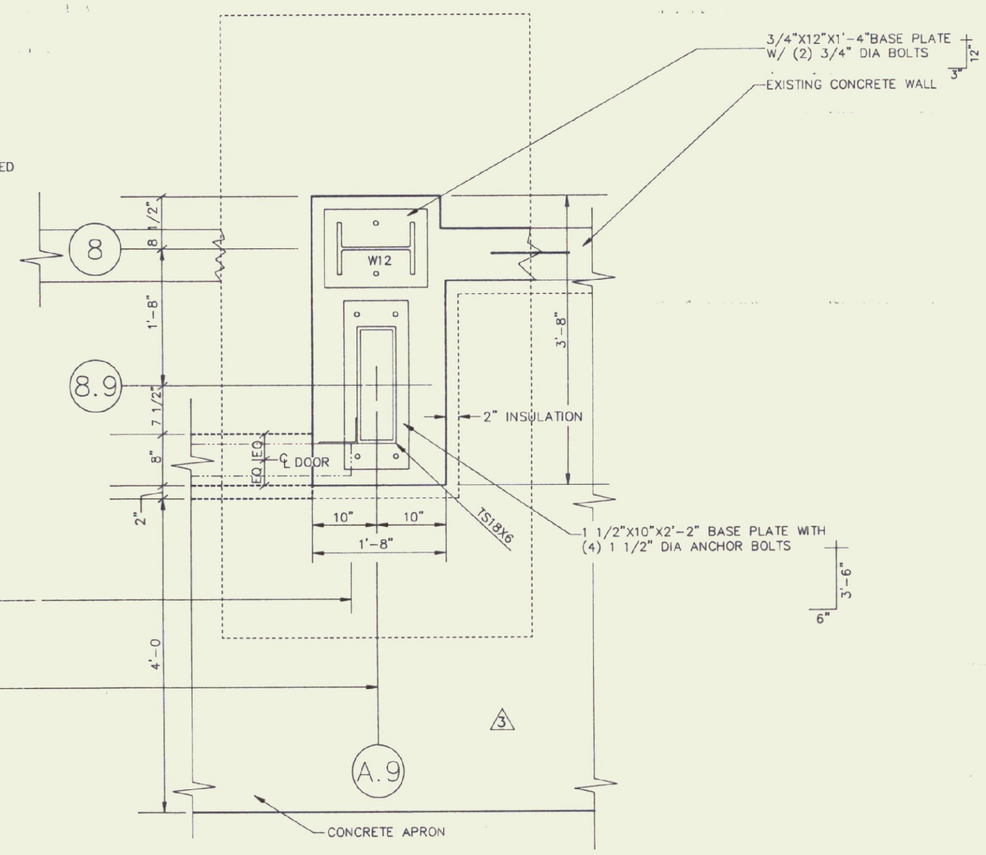

DETAIL H/S1
SCALE: 3/4"=1'-0"

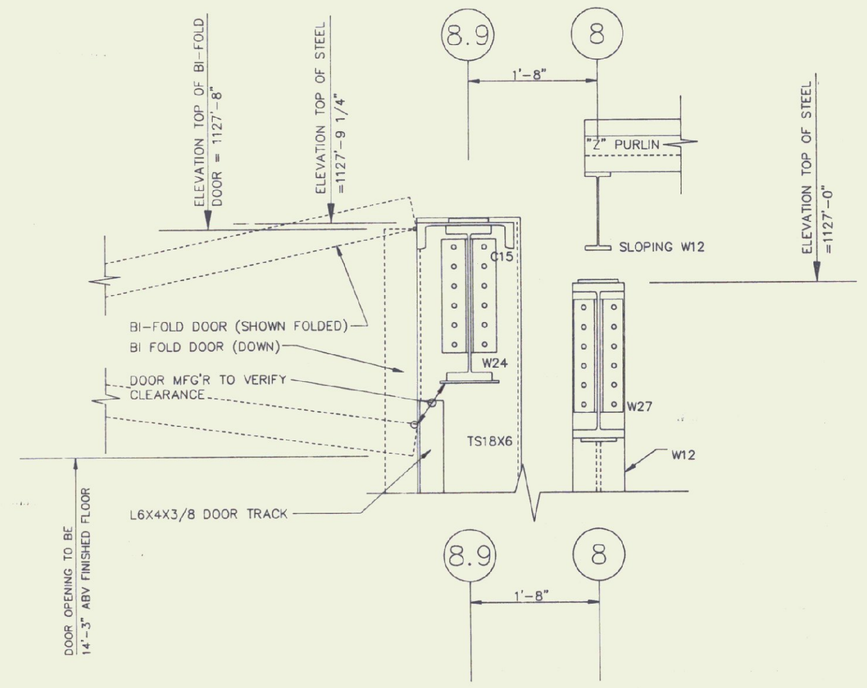

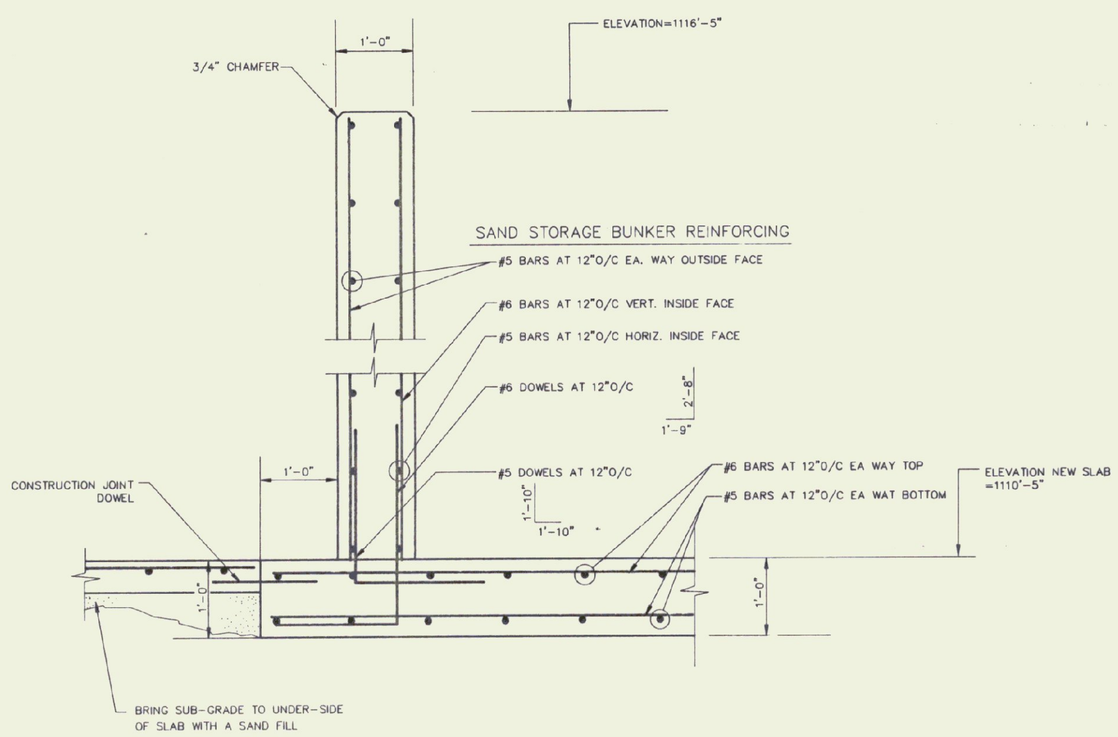

SECTION THROUGH SAND BUNKER 4/S1
SCALE: 3/4"=1'-0"

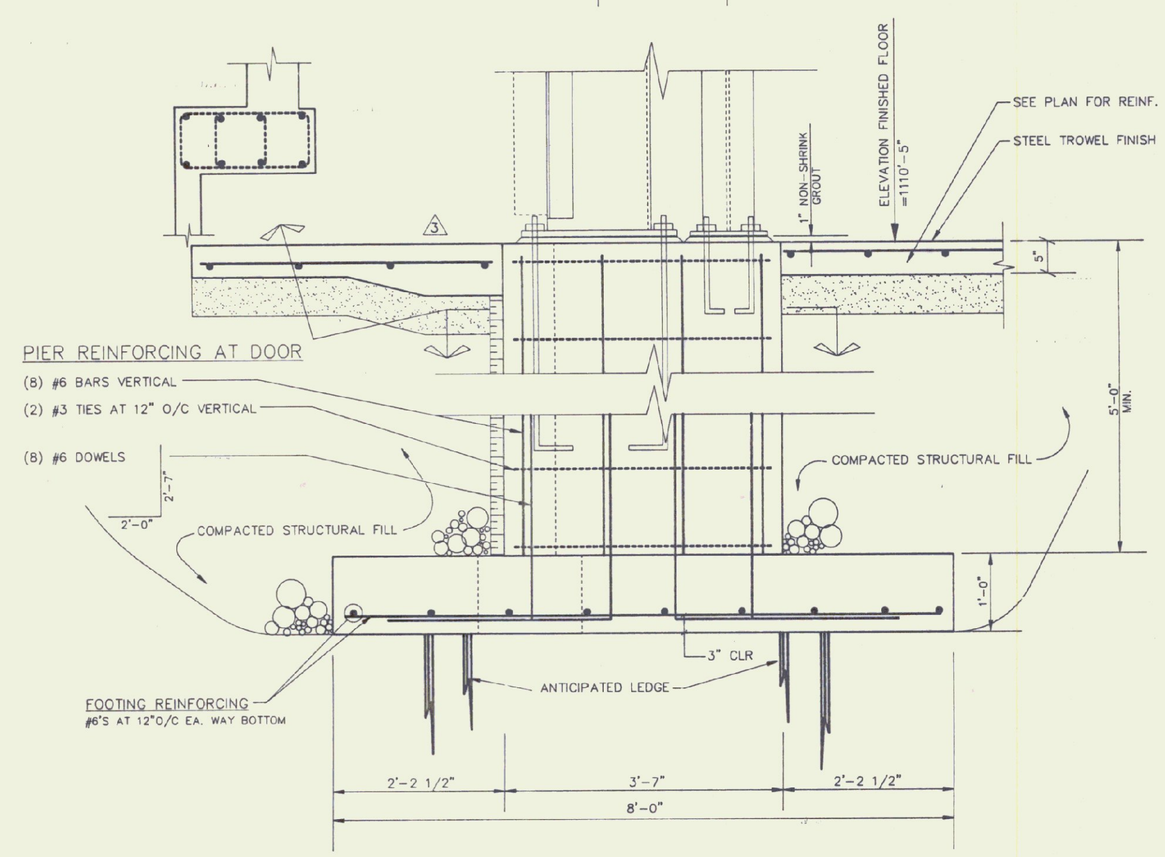

SECTION AT BI-FOLD DOOR FRAME 5/S1
SCALE: 3/4"=1'-0"

STRUCTURAL NOTES

1. THE STRUCTURAL DRAWINGS SHALL BE USED IN CONJUNCTION WITH THE SITE, ARCHITECTURAL, MECHANICAL, ELECTRICAL AND PLUMBING DRAWINGS AND THE SPECIFICATIONS.
2. ALL WELDING SHALL CONFORM TO THE "STRUCTURAL WELDING CODE - ANSI/AWS D1.1" OF THE AMERICAN WELDING SOCIETY
3. STEEL MATERIALS SHALL CONFORM TO THE FOLLOWING:
   STRUCTURAL SHAPES
   ASTM A36, Fy = 36,000 PSI
   BOLTS
   ASTM A325
   TUBE STEEL COLUMNS
   Fy = 46 KSI
4. ALL SHOP CONNECTIONS SHALL BE BOLTED OR WELDED. ALL FIELD CONNECTIONS SHALL BE BOLTED EXCEPT WHERE WELDING IS SPECIFICALLY CALLED FOR. BOLTS SHALL BE 3/4" MINIMUM WITH OPEN HOLES 1/16" LARGER. CONNECTIONS NOT DETAILED SHALL BE DESIGNED FOR THE LOADS INDICATED ON THE DRAWINGS OR THOSE GIVEN IN THE AISC UNIFORM LOAD TABLES, WHICHEVER IS GREATER. THE STRUCTURAL STEEL FABRICATOR IS RESPONSIBLE FOR THE DESIGN OF ALL CONNECTIONS.
5. ALL STRUCTURAL STEEL SHALL BE SHOP PAINTED (MINIMUM 2 MILS DRY FILM THICKNESS) WITH AN APPROVED RUST INHIBITIVE PRIME PAINT. STEEL SHALL BE THOROUGHLY CLEANED PRIOR TO PAINTING. THE CONTRACTOR SHOULD HAVE AVAILABLE, THE EXACT SAME PAINT FOR FIELD TOUCH UP.
6. UNLESS OTHERWISE NOTED, PROVIDE LOOSE LINTELS OVER OPENING IN MASONRY WALLS FOR EACH 4" OF THICKNESS AS FOLLOWS:
   1. L3 ½ X 3 ½ X 1/4 (LENGTH = M.O. +8") FOR OPENING UP TO AND INCLUDING 4'.0"
   2. L6 X 3 ½ X 5/16 (LENGTH = M.O + 12") FOR OPENINGS GREATER THAN 4'.0" TO 6'.6"
7. ALL ROOF DECKING SHALL BE INSTALLED IN STRICT ACCORDANCE WITH THE MANUFACTURER'S SPECIFICATIONS, FACTORY MANUAL REQUIREMENTS AND THE STEEL DECK INSTITUTE (S.D.I.) UNLESS OTHERWISE NOTED. ALL EDGES OF THE DECKING SHALL BE PROPERLY SUPPORTED.
8. DESIGN LOADS:

ROOF

SNOW LOAD	=	45 PSF
DEAD LOAD	=	12 PSF
TOTAL	=	57 PSF

BASIC WIND SPEED = 70 MPH
EARTHQUAKE ZONE = (2)

\HANGARS\HUNTING\HUNT.DWG

STATE OF VERMONT
MICHAEL D. CHENETTE
REG. NO. 8869
PROFESSIONAL ENGINEER

Gossens Bachman
Architecture and Interior Design

Gossens Bachman, Inc.
18 Langdon Street
Montpelier, Vermont 05602
(802) 229-1664

CEI
Chenette Engineering, Inc.

7 Main Street
Montpelier, Vermont 05602
(802) 229-1442

Project Title:
Agency of Transportation: Huntington Hangar
Berlin, Vermont
AIR-04-3076

Revisions:
1. 7/7/95 SAND BUNKER WALL
2. 19 OCT 1995 EDIT DETAIL G/S1
3. 20 NOV 1995 CONC. APRON

Job Number:
Drawn By: CEI
Checked By: CEI
Scale: as noted
Date: Nov. 11, 1992
Sheet Title:
Details Notes

Sheet Number:
S4

© Gossens Bachman, Inc.