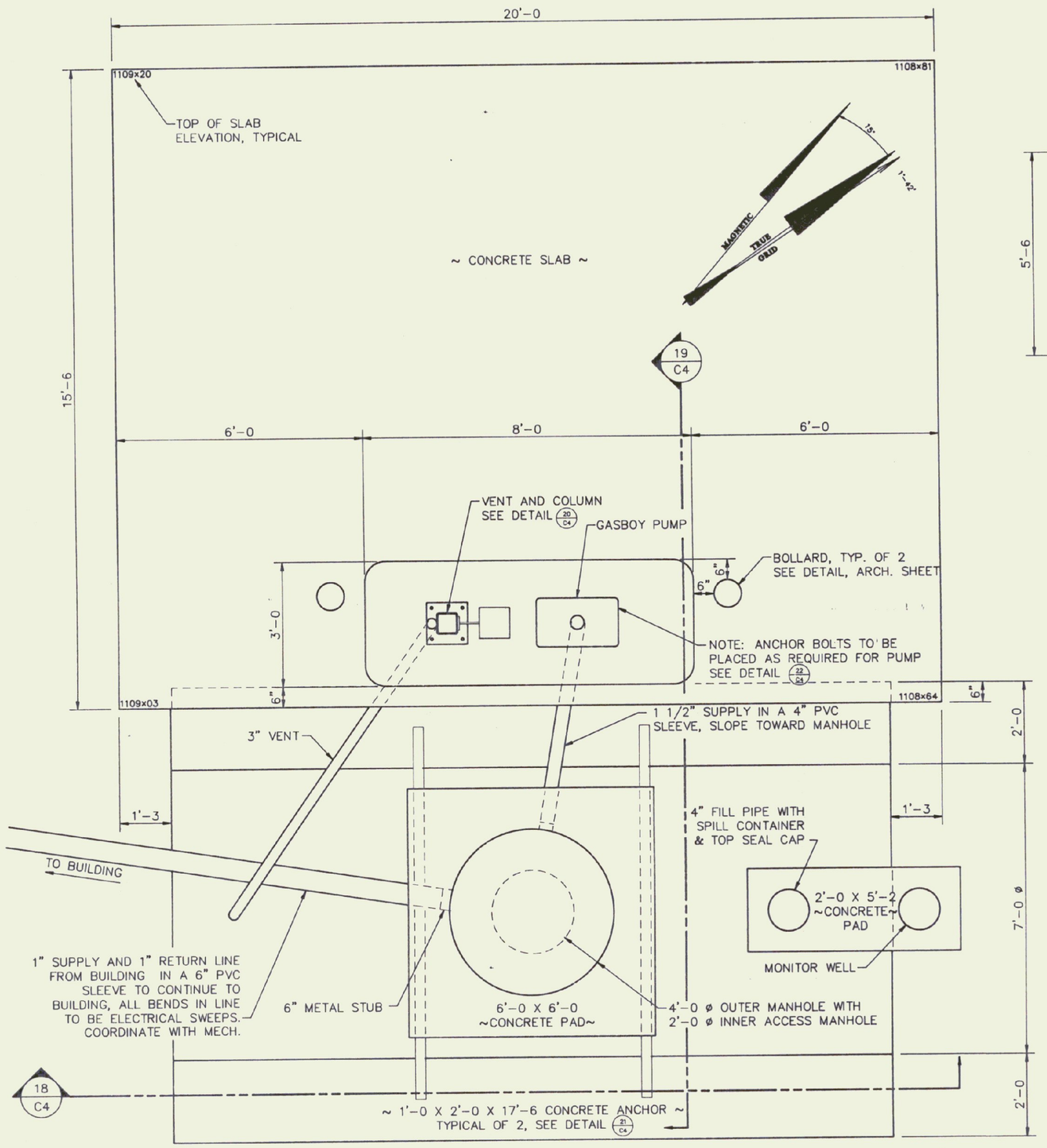

PLAN FUEL TANK AND SLAB 17/C1

SCALE: 1/2"=1'-0

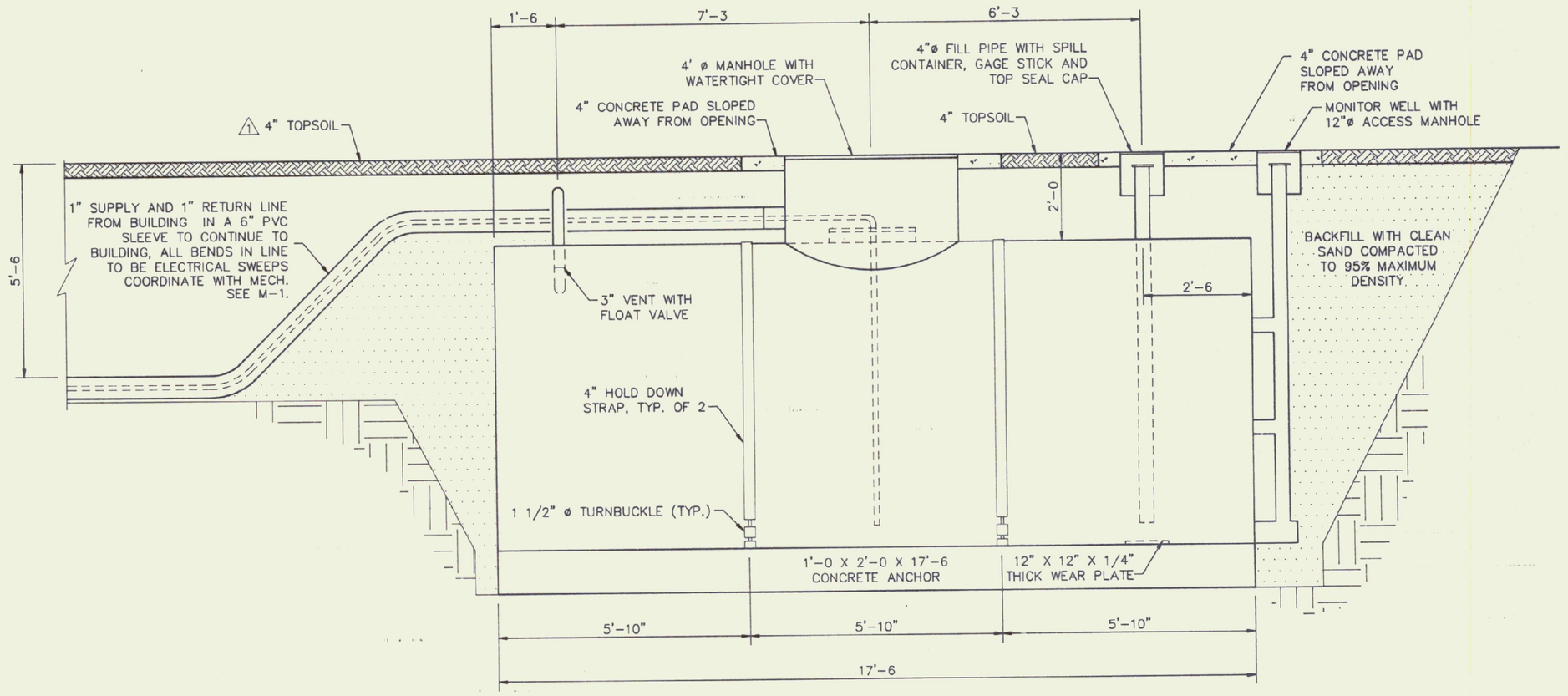

SECTION FUEL STORAGE TANK 18/C4

SCALE: 1/2"=1'-0

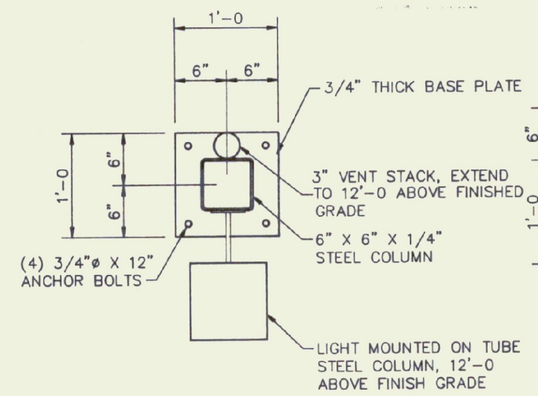

DETAIL VENT/COLUMN 20/C4

SCALE: 1"=1'-0

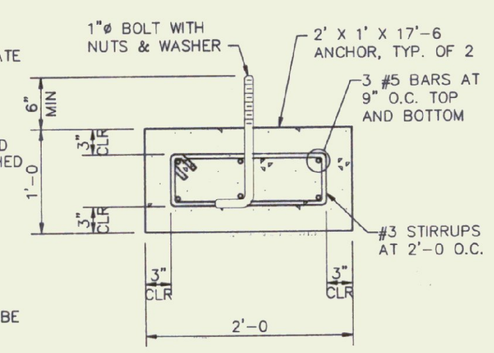

DETAIL TANK ANCHOR, TYP. OF 2 21/C4

SCALE: 1"=1'-0

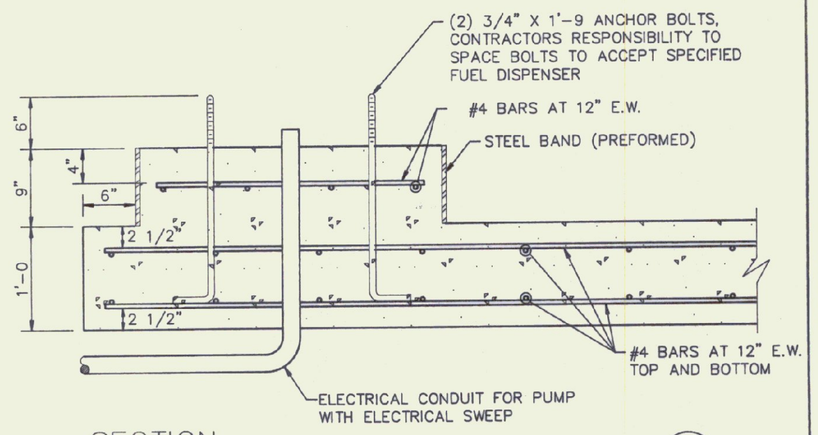

SECTION PUMP ISLAND 22/C4

SCALE: 1"=1'-0

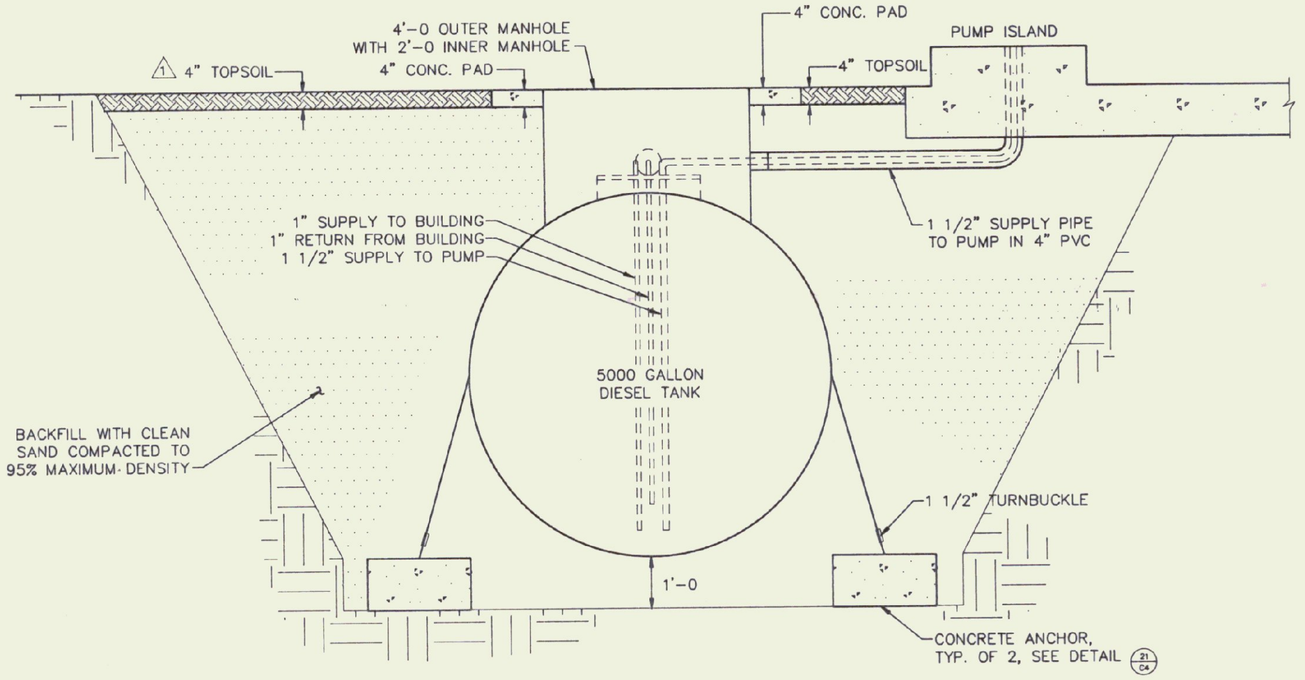

SECTION FUEL STORAGE TANK 19/C4

SCALE: 1/2"=1'-0

\HANGARS\HUNTING\TANKDETS.DWG

PUMP AND TANK NOTES

1. PROVIDE 1 GAS BOY SERIES 50,53A REMOTE DISPENSER, CONNECT TO 5,000 GAL. DIESEL TANK.
2. DIESEL TANK TO BE UNDERGROUND STI-P3 SYSTEM DOUBLE WALL TANK 7 GA. INNER WALL, 10 GA. OUTERWALL.
3. CONTAINMENT MANHOLE AND FILL PIPE TO HAVE WATER TIGHT SEAL.
4. PUMP TO HAVE DIESEL FILTER, 1 1/2 IN. DIA. CHECK VALVE, STANDARD 25'-0 HOSE, MANUAL NOZZLE AND METER IN U.S. GALLONS, WITH HOSE RETRIEVER.
5. ALL INSTALLATIONS ARE TO CONFORM TO STATE OF VERMONT, UNDERGROUND STORAGE TANK REGULATIONS, MARCH 1, 1987.

CONCRETE NOTES

1. ALL CONCRETE SHALL BE NORMAL WEIGHT HAVING A MINIMUM STRENGTH OF 3500 PSI AT 28 DAYS. CLASS B CONCRETE PER STATE OF VERMONT, AGENCY OF TRANSPORTATION STANDARD SPECIFICATION FOR CONSTRUCTION.
2. REINFORCING STEEL SHALL COMPLY WITH ASTM A615 GRADE 60.
3. ANCHOR BOLTS TO BE GRADE A307.
4. SLOPE CONCRETE AWAY FROM ALL MANHOLES AND FILL FORTS.

STATE OF VERMONT MICHAEL J. CHENETTE REG. 3869 PROFESSIONAL ENGINEER

Gossens Bachman
Architecture and Interior Design

Gossens Bachman, Inc.
18 Langdon Street
Montpelier, Vermont 05602
(802) 229-1654

CEI
Chenette Engineering, Inc.

7 Main Street
Montpelier, Vermont 05602
(802) 229-1442

Project Title:

Agency of Transportation: Huntington Hangar

Berlin, Vermont

AIR-04-3076

Revisions:

1 19 OCT 1995 MISC. NOTES, TOPSOIL

Job Number:
Drawn By: CEI
Checked By: CEI
Scale: as noted
Date: Nov. 11, 1992
Sheet Title:

Oil Tank

Sheet Number:

C4

© Gossens Bachman, Inc.