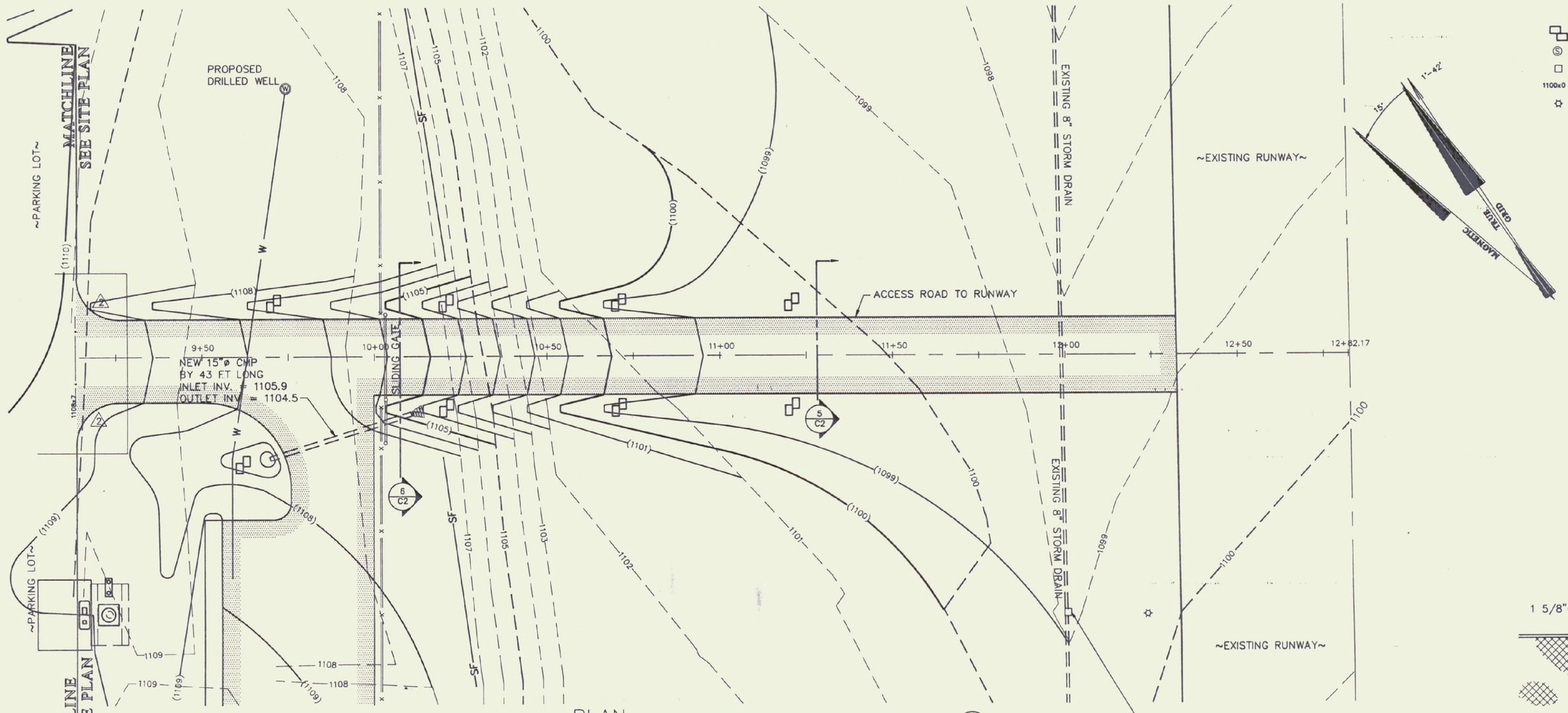

PLAN — PROPOSED RUNWAY ACCESS ROAD (3/C2)

SCALE: 1"=20'

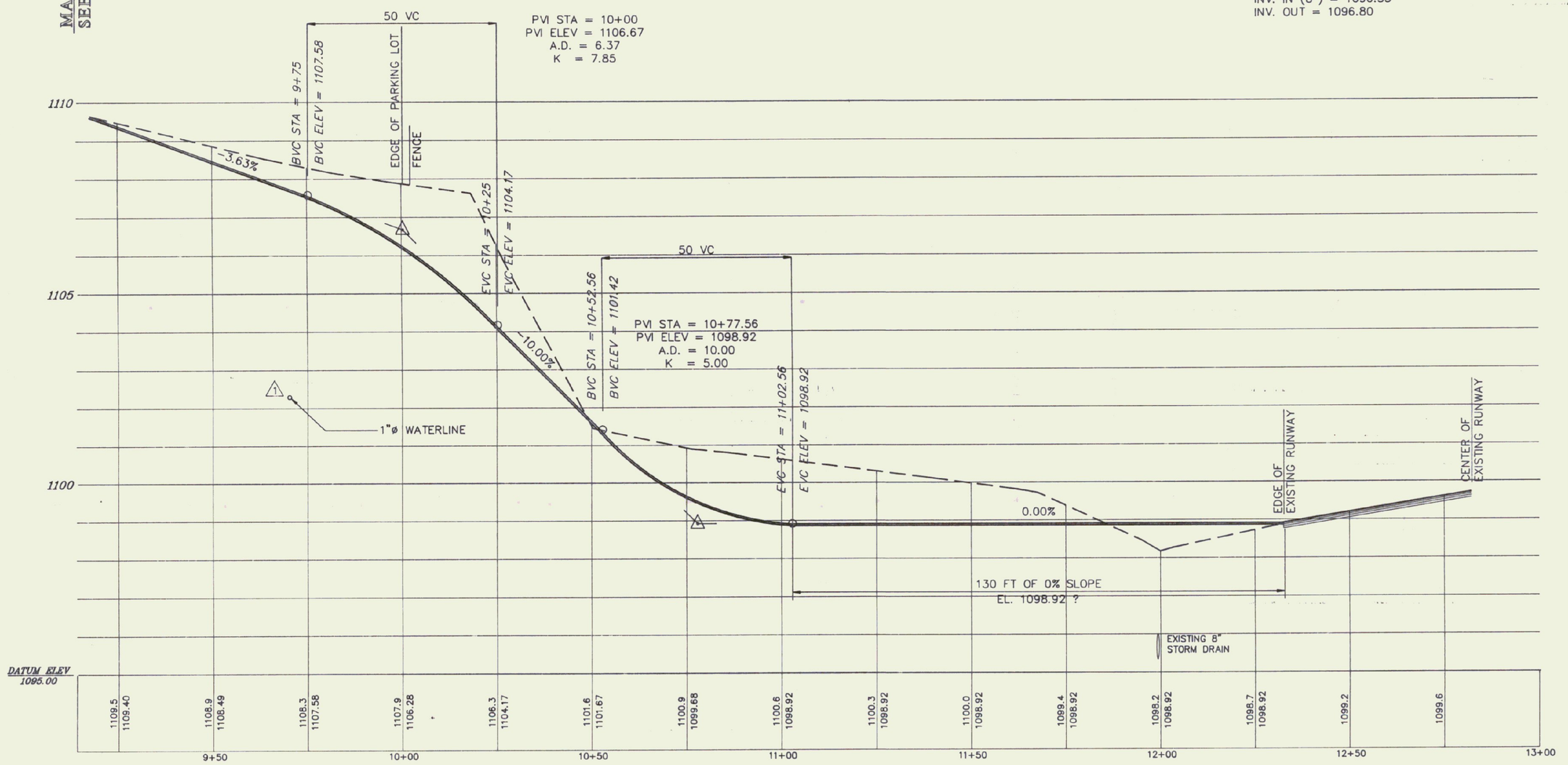

PROFILE — PROPOSED RUNWAY ACCESS ROAD (4/C2)

SCALE: 1"=20' H., 1"=2' V.

\HANGARS\HUNTING\PLANPROF.DWG

LEGEND:

- HAY BALE CHECK DAM, SEE DETAIL 9/C3
- EXISTING SEWER MANHOLE
- EXISTING DROP INLET
- 1100x0 FINISH GRADE SPOT ELEVATION
- EXISTING LIGHT POLE
- 1100 — EXISTING GROUND CONTOUR LINE
- (1100) — FINISHED GRADE CONTOUR LINE
- —W— PROPOSED WATER SERVICE LINE
- —X— SECURITY FENCE
- —SF— PROPOSED SILT FENCE, SEE DETAIL 11/C3

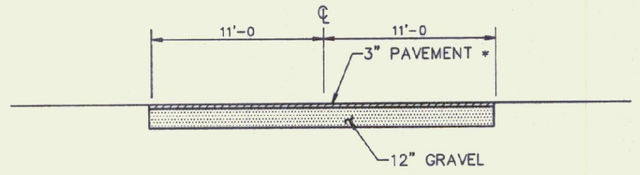

* 2" OF TYPE II COMPOSITION (BASE COURSE)
1" OF TYPE IV COMPOSITION (WEAR COURSE)

SECTION — THROUGH ACCESS ROAD, 0% GRADE (5/C2)

SCALE: NONE

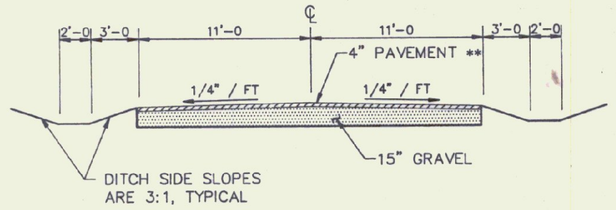

** 2 1/2" OF TYPE II COMPOSITION (BASE COURSE)
1 1/2" OF TYPE IV COMPOSITION (WEAR COURSE)

SECTION — THROUGH ACCESS ROAD (6/C2)

SCALE: NONE

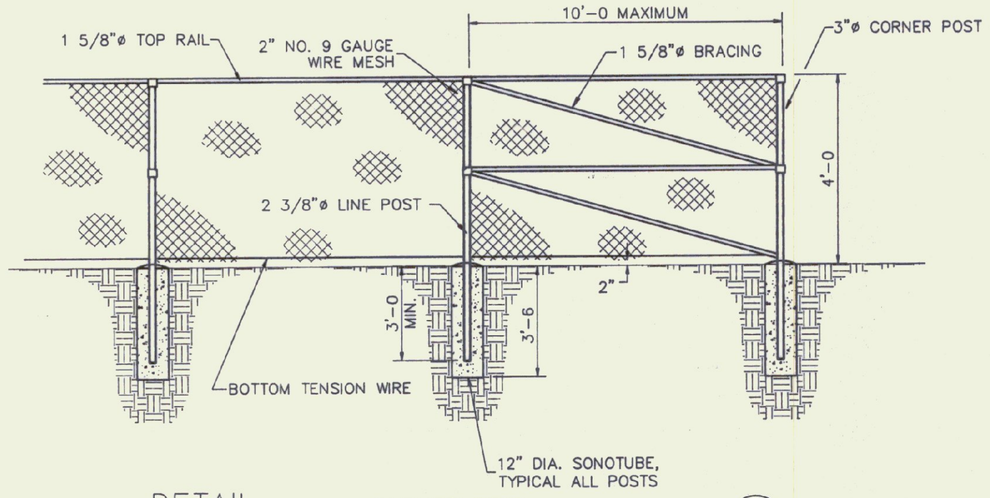

DETAIL — CHAIN LINK FENCE (0/C2)

SCALE: NONE

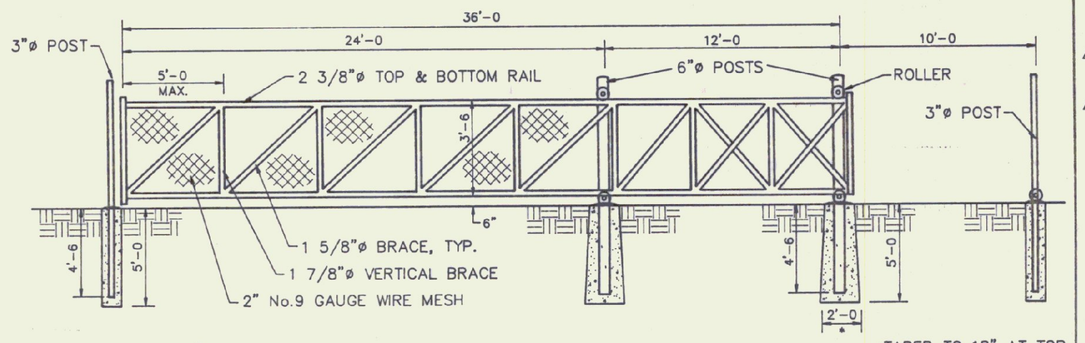

DETAIL — 24' SLIDING GATE (P/C2)

SCALE: NONE

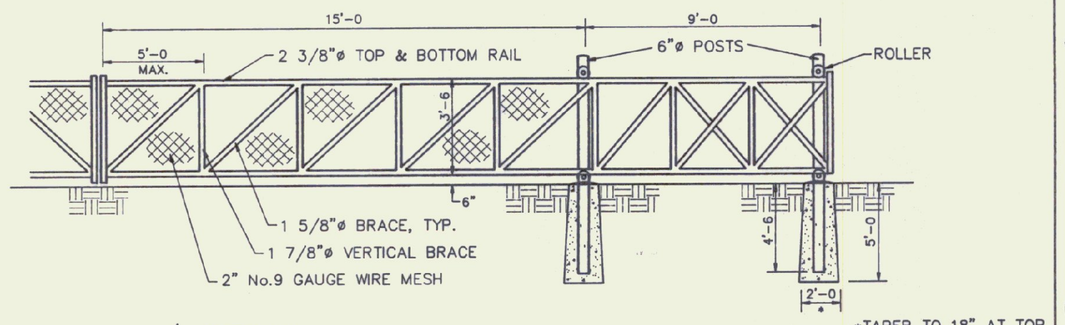

DETAIL — 15' SLIDING GATE (Q/C2)

SCALE: NONE

STATE OF VERMONT — MICHAEL J. CHENETTE — No. 3889 — PROFESSIONAL ENGINEER

Gossens Bachman
Architecture and Interior Design

Gossens Bachman, Inc.
18 Langdon Street
Montpelier, Vermont 05602
(802) 229-1664

CEI
Chenette Engineering, Inc.

7 Main Street
Montpelier, Vermont 05602
(802) 229-1442

Project Title:

Agency of Transportation: Huntington Hangar
Berlin, Vermont

AIR-04-3076

Revisions:

1. 19 OCT 1995 WATER LINE
2. 24 OCT 1995 CHAIN LINK FENCE, GATE 12'R CURB

Job Number:
Drawn By: CEI
Checked By: CEI
Scale: as noted
Date: Nov. 11, 1992

Sheet Title:

Access Road Plan and Profiles

Sheet Number:

C2

© Gossens Bachman, Inc.