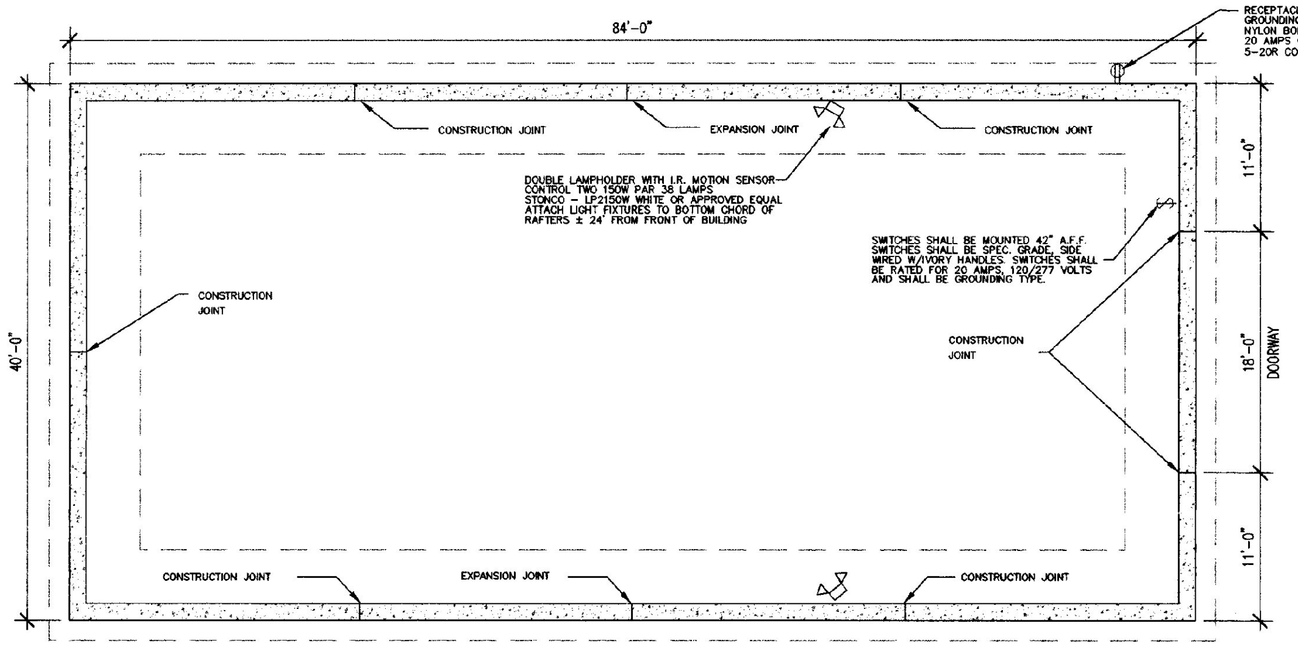

FOUNDATION PLAN

SCALE: 1/8" = 1'-0"

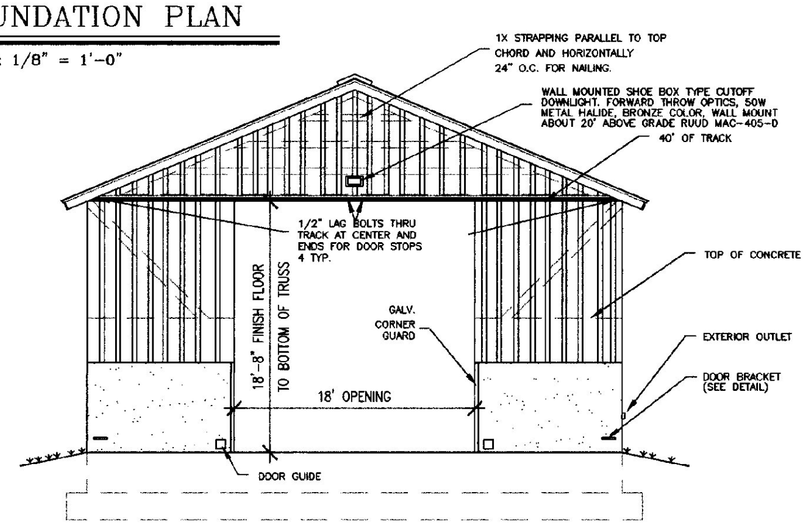

FRONT ELEVATION

SCALE: 1/8" = 1'-0"

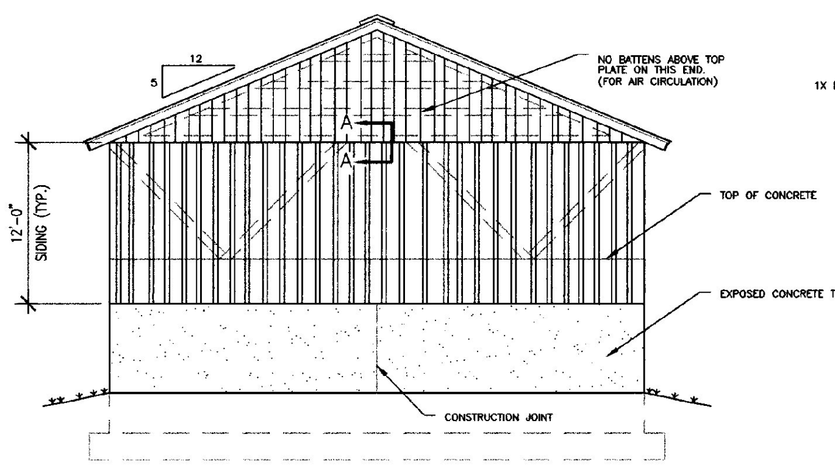

BACK ELEVATION

SCALE: 1/8" = 1'-0"

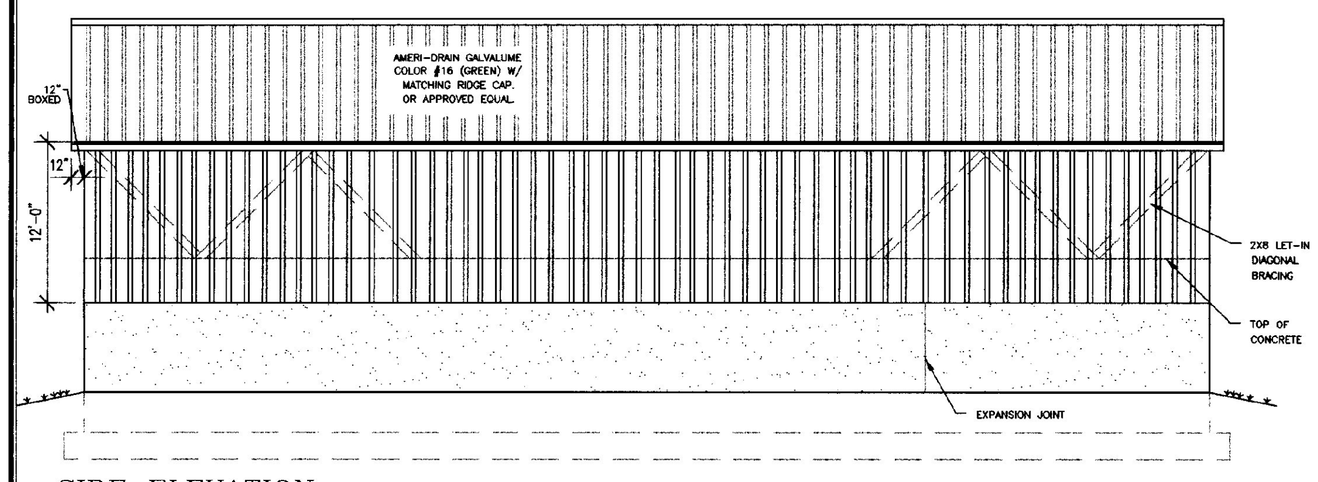

SIDE ELEVATION

SCALE: 1/8" = 1'-0"

NOTE:
ALL ELECTRICAL CONDUIT BELOW GRADE AND ON THE EXTERIOR OF THE BUILDING SHALL BE 1" RIGID METAL CONDUIT. CONDUIT INSIDE THE BUILDING SHALL BE 3/4" SCHEDULE 80 P.V.C.

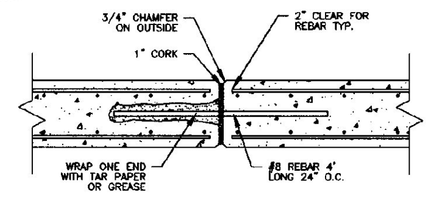

EXPANSION JOINT DETAIL

N.T.S.

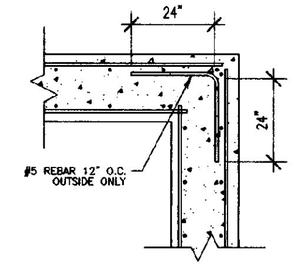

CORNER DETAIL

N.T.S.

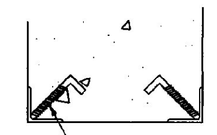

CORNER GUARD

N.T.S.

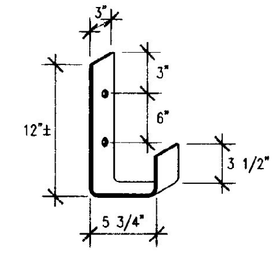

3/8" X 3" X 22" HOT ROLLED STEEL BENT AT 90° ANGLES TO SHAPE WITH 2- 7/16" HOLES, CENTERED.

ATTACH TO CONCRETE WALL WITH 3/8"Ø X 2-1/2" LAG BOLTS WITH LEAD SHIELDS

ATTACH TO DOORS WITH 3/8"Ø X 3" CARRIAGE BOLTS. (SIX BRACKETS REQUIRED.)

DOOR BRACKET DETAIL

N.T.S.

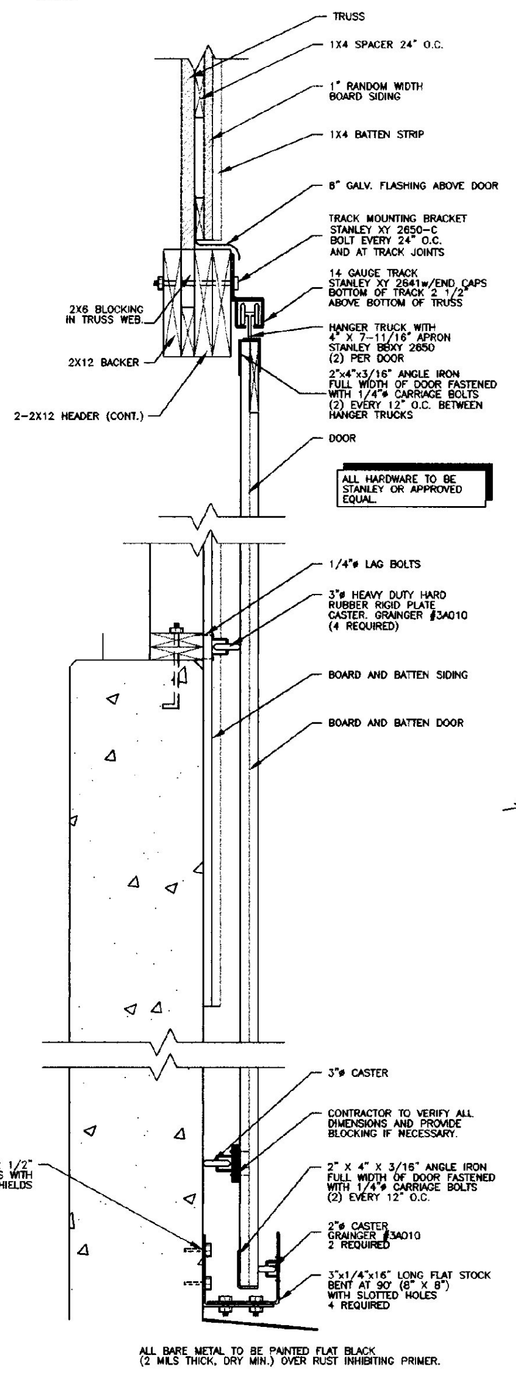

DOOR TRACK & GUIDE DETAIL

N.T.S.

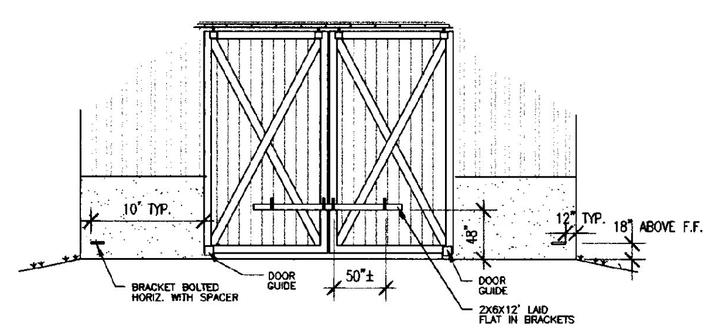

DOOR BRACKET LOCATION

N.T.S.

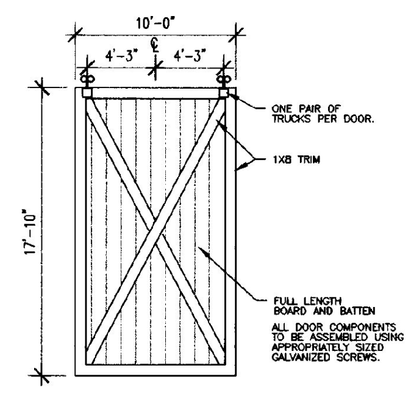

DOOR DETAIL

N.T.S.

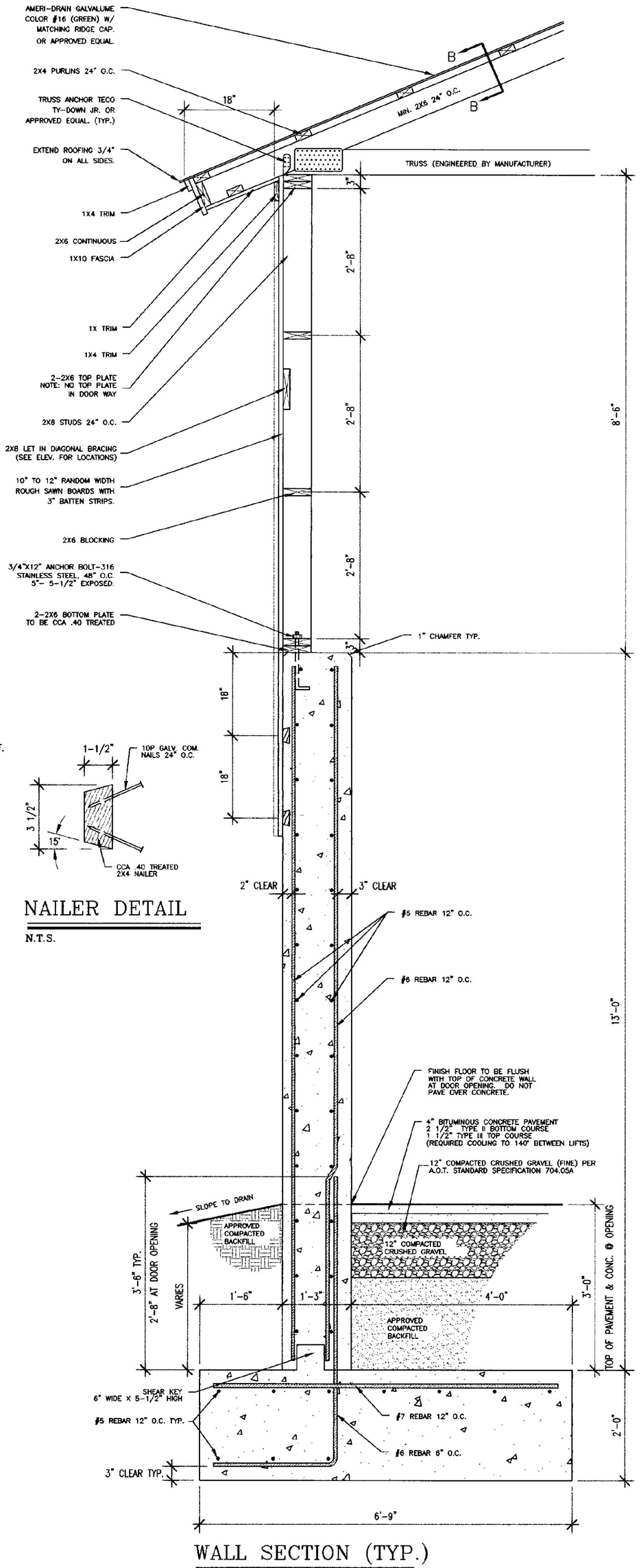

WALL SECTION (TYP.)

SCALE: 3/4" = 1'-0"

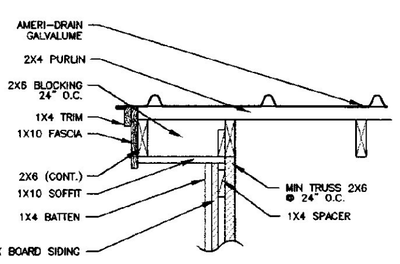

SECTION B-B

N.T.S.

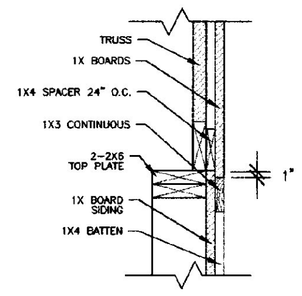

SECTION A-A

N.T.S.

NAILER DETAIL

N.T.S.

GENERAL NOTES:

ALL MATERIAL TO BE FURNISHED BY CONTRACTOR.

ALL EXPOSED METAL, EXCEPT GALVANIZED, (CORNER ANGLES, DOOR GUIDES, BRACKETS ETC.) SHALL BE PAINTED FLAT BLACK (2 MILS THICK, DRY, MIN.) OVER RUST INHIBITING PRIMER.

ALL ELECTRICAL WORK SHALL COMPLY WITH N.E.C.

TRUSS NOTES:

TRUSS MANUFACTURER TO SEND SUBMISSIONS TO THE B.G.S. ENGINEER A SET OF ENGINEERED AND STAMPED DRAWINGS FOR APPROVAL PRIOR TO TRUSS MANUFACTURE.

TRUSS MANUFACTURER TO PROVIDE THE CONTRACTOR WITH ALL THE NECESSARY INSTRUCTIONS FOR PROPER TRUSS INSTALLATION, ANCHORAGE, BRACING, LIFTING, ETC.

TRUSS DESIGN IN ACCORDANCE WITH THE 1987 B.O.C.A. FOR VERMONT

MINIMUM LOADS:

LIVE - 70 P.S.F - PER 1994 VERMONT FIRE PROTECTION CODE.

DEAD - 45 P.S.F CALCULATED FROM TRUSS AND ROOF MATERIALS AND IN ADDITION 5 P.S.F. ON BOTTOM CHORD.

WIND - 25 P.S.F.

DIAGONAL BRACING PER TRUSS MANUFACTURER AND PER MINIMUM TRUSS BRACING DETAIL IN SPECIFICATIONS.

FINISH NOTES:

ALL BOARDS & BATTENS TO BE STAINED WITH ONE COAT ALL SURFACES PRIOR TO INSTALLATION.

AFTER INSTALLATION EXTERIOR SIDING TO RECEIVE (1) ADDITIONAL COAT OF STAIN. STAIN TO BE SHERWIN WILLIAMS #A535 FOLIAGE GREEN OR EQUAL. FIRST COAT WILL BE SEMI-TRANSPARENT & THE SECOND COAT WILL BE HIGH PIGMENT STAIN.

CONCRETE NOTES:

- ALL CONCRETE TO BE 3500 PSI @ 28 DAYS WITH A MAXIMUM SLUMP OF 4".
- 5%-8% AIR ENTRAINMENT.
- 1/2" "V" JOINTS IN EXPOSED FACE OF CONSTRUCTION JOINTS.
- 3/4" CHAMFER ON EACH FACE OF EXPANSION JOINTS.
- GALVANIZED L IRON CAST INTO WALL CORNERS AT DOOR OPENINGS.
- RE-BAR TO BE CONTINUOUS THROUGH CONSTRUCTION JOINTS.
- NO HORIZONTAL CONSTRUCTION JOINTS IN WALLS - CONTINUOUS POUR.
- NO CONSTRUCTION OR EXPANSION JOINTS REQUIRED IN FOOTINGS.
- CONTRACTOR TO LEAVE NO METAL WITHIN 1" OF SURFACE. USE 1" DEEP PLASTIC CONES AT ALL TIES AND PLUG ALL TIE HOLES WITH AN APPROVED NON-SHRINK GROUT.
- ALL RE-BAR TO BE GRADE 60.
- RE-BAR TO BE STORED ON BLOCKING 4" MIN. ABOVE GROUND.
- CONCRETE SUPPLIER TO PROVIDE TEST CYLINDERS FOR CONCRETE TESTING.
- ALL CONCRETE TESTING TO BE DONE BY OWNER. CONTRACTOR IS RESPONSIBLE FOR SCHEDULING.
- EXPOSED WALLS TO BE DRESS FINISHED PER A.O.T. SPECIFICATIONS.

LUMBER NOTES:

FRAMING MEMBERS TO BE KILN DRIED CONST. GRADE SPRUCE S4S MAX. 19% MOISTURE CONTENT.

PLATES & NAILERS IN CONTACT WITH CONCRETE TO BE CCA .40 TREATED.

BOARD & BATTEN SIDING TO BE NATIVE ROUGH SAWN WHITE PINE, RED PINE, SPRUCE, OR EASTERN FIR. BOARDS TO BE RANDOM WIDTH 8"-12" - BATTEN WIDTH 3".

BOARD SIDING & BATTEN STRIPS TO BE FULL LENGTH (NO HORIZONTAL JOINTS).

ALL NAILS TO BE GALVANIZED.

GENERAL CONTRACTORS MAY CONTACT VERMONT CORRECTIONAL INDUSTRIES FOR INFORMATION AND PRICING FOR ROUGH SAWN LUMBER TO BE USED ON THE GARAGE FACILITY, SALT/SAND SHEDS AND STORAGE SHED.

CONTACT: STEVEN MANFIELD
VERMONT OFFENDER WORK PROGRAM
103 SOUTH MAIN STREET
WATERBURY, VERMONT 05671-1001
TEL: 241-4419 FAX: 241-3974

TYPICAL OF 2

STATE OF VERMONT
DEPARTMENT OF BUILDINGS AND GENERAL SERVICES
AGENCY OF ADMINISTRATION
MONTPELIER, VERMONT

AGENCY OF TRANSPORTATION
MIDDLEBURY MAINTENANCE FACILITY
40' X 84' SALT SHED
MIDDLEBURY VERMONT

REVISIONS

SCALE: AS NOTED
DATE: APRIL 2000
DRAWN BY: B. MCAVOY
APPR. BY:

MIDDLEBURY
MAINTENANCE FACILITY
40'x84'

A-1

4 OF 9

H:\towns\middlebury\saltshed\40x84.dwg Tue Jun 20 07:36:24 2000