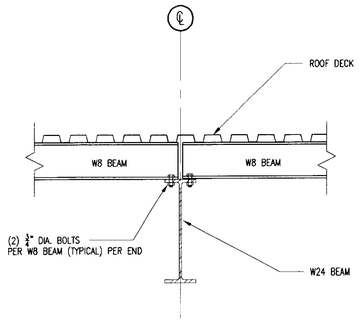

FRAMING DETAIL (1)
3/4" = 1'-0"

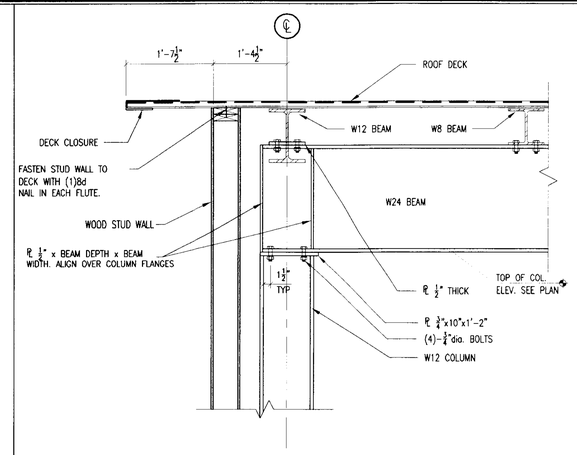

EAVE DETAIL AT EAST AND WEST WALLS (2)
3/4" = 1'-0"

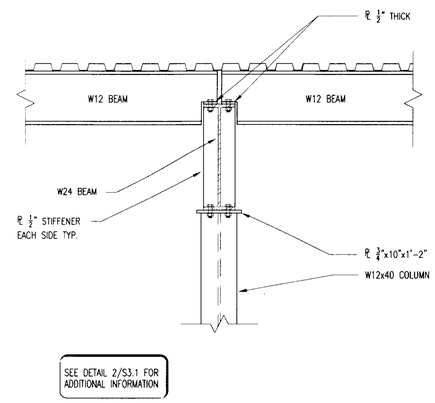

FRAMING DETAIL (3)
3/4" = 1'-0"

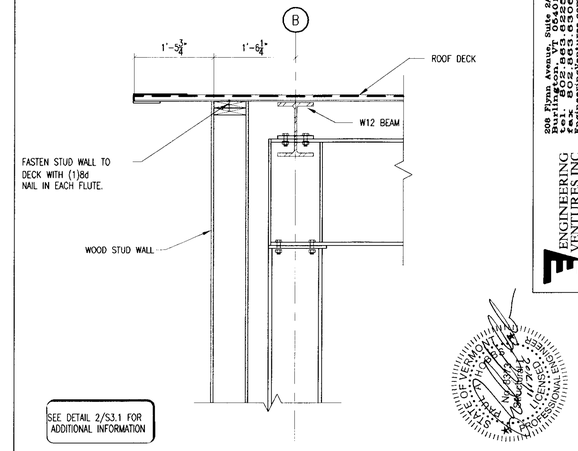

EAVE FRAMING DETAIL AT OVERHEAD DOORS (4)
3/4" = 1'-0"

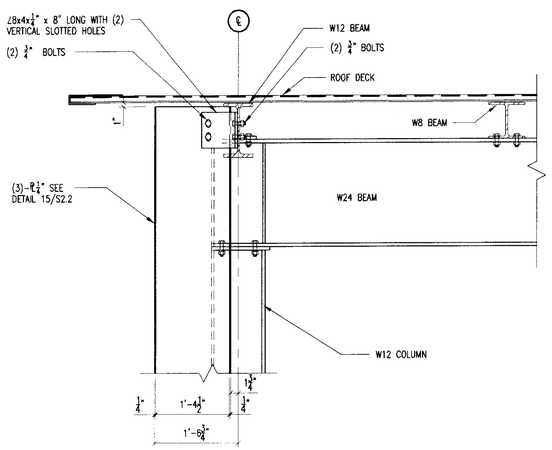

OVERHEAD DOOR JAMB DETAIL (5)
3/4" = 1'-0"

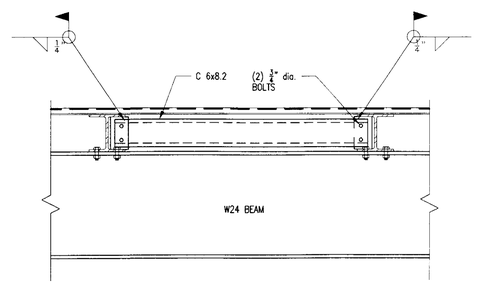

FRAMING DETAIL (6)
3/4" = 1'-0"

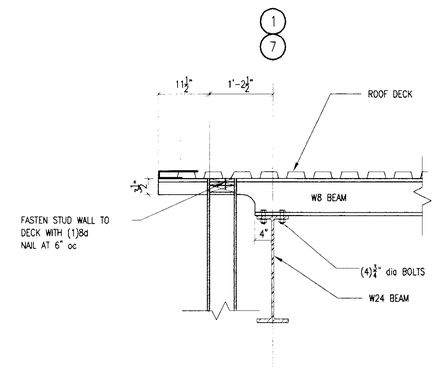

EAVE DETAIL AT NORTH AND SOUTH WALLS (7)
3/4" = 1'-0"

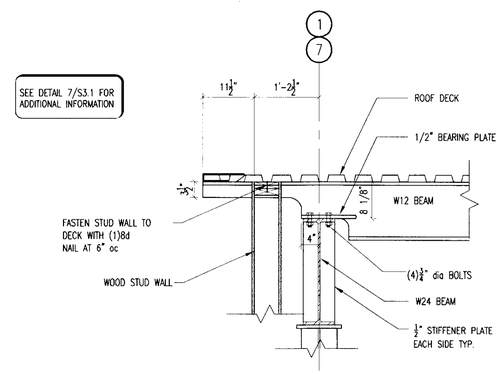

DECK SUPPORT-CORNER COLUMNS (8)
3/4" = 1'-0"

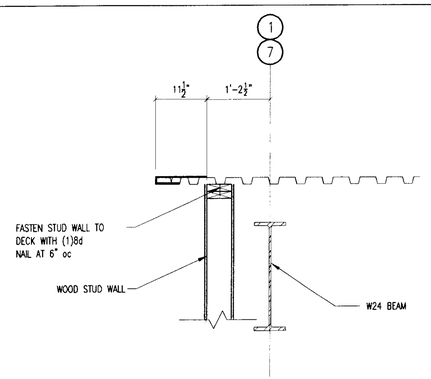

EAVE DETAIL AT NORTH AND SOUTH WALLS (9)
3/4" = 1'-0"

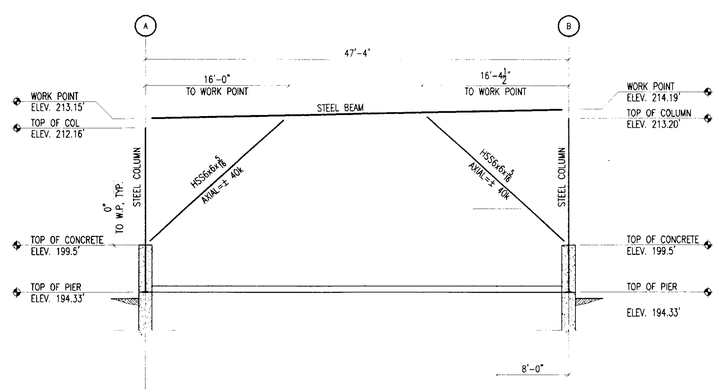

BRACE FRAME ELEVATION-GRID 1 (10)
1/8" = 1'-0"

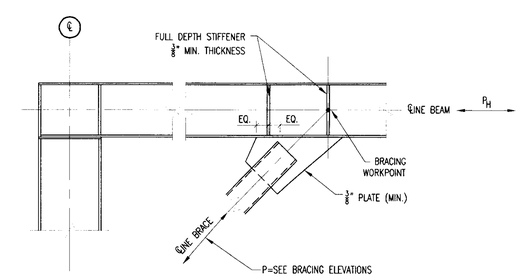

TYPICAL BRACING CONNECTION
AT ECCENTRIC BRACE (11)
3/4" = 1'-0"

208 Flynn Avenue, Suite 2A
Burlington, VT 05401
Ph. 802.863.6501
Fax. 802.863.6505
Engineering@ev-inc.com
ENGINEERING VENTURES INC

1795 WILLISTON RD. STE. 200
WILLISTON, VT 05495
Phone: (802) 862-1420
Fax: (802) 862-1448

29 MAYER STREET, STE 204
NORTHAMPTON, MA 01060
Phone: (413) 586-2777
Fax: (413) 586-2779

1400 BROOKS STREET
MONTPELIER, VT 05602
Phone: (802) 371-2857
Fax: (802) 371-2856

DORE AND WHITTIER, INC.
Architects • Project Managers

STATE OF VERMONT
DEPARTMENT OF BUILDINGS
AND GENERAL SERVICES
AGENCY OF ADMINISTRATION
MONTPELIER, VERMONT

AGENCY OF TRANSPORTATION
N. FERRISBURGH MAINTENANCE FACILITY
N. FERRISBURGH VERMONT

REVISIONS

SCALE: AS NOTED
DATE: 01/04/06
DRAWN BY: JML
APPR. BY:

N. FERRISBURGH
MAINTENANCE GARAGE
STRUCTURAL DETAILS

S-3.1