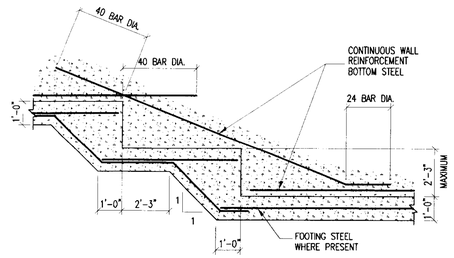

TYPICAL FOOTING STEP (1)

1/2" = 1'-0"

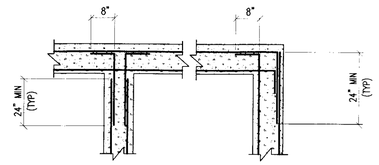

CORNER REINFORCING DETAIL (2)

1/2" = 1'-0"

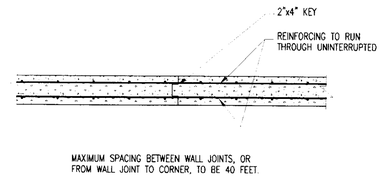

WALL CONSTRUCTION JOINT (3)

1/2" = 1'-0"

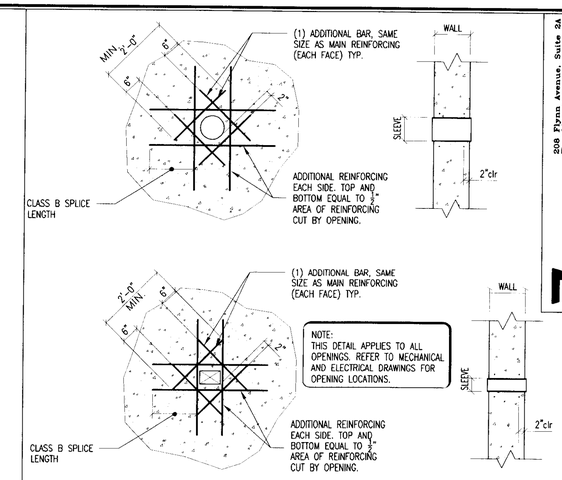

TYPICAL WALL OPENING DETAIL (4)

1/2" = 1'-0"

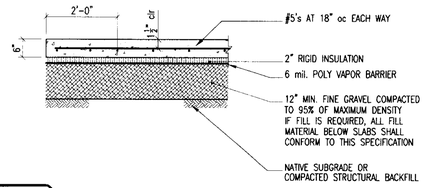

NOTE:
RADIANT HEAT TUBING TO BE LOCATED BELOW SLAB REINFORCING, COORDINATE WITH RADIANT HEAT DESIGNER AND SUPPLIER/INSTALLER.

TYPICAL SLAB ON GRADE (5)

1/2" = 1'-0"

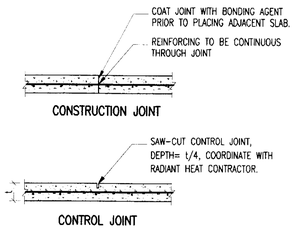

NOTE:
RADIANT HEAT TUBING TO BE LOCATED BELOW SLAB REINFORCING, COORDINATE WITH RADIANT HEAT DESIGNER AND SUPPLIER/INSTALLER.

TYPICAL SLAB JOINTS (6)

1/2" = 1'-0"

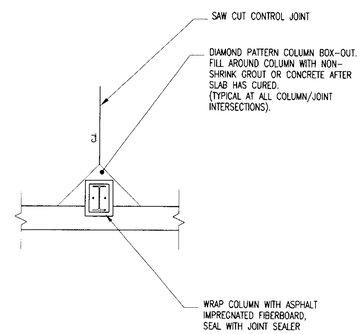

TYPICAL CONTROL JOINT AT COLUMN (7)

1/2" = 1'-0"

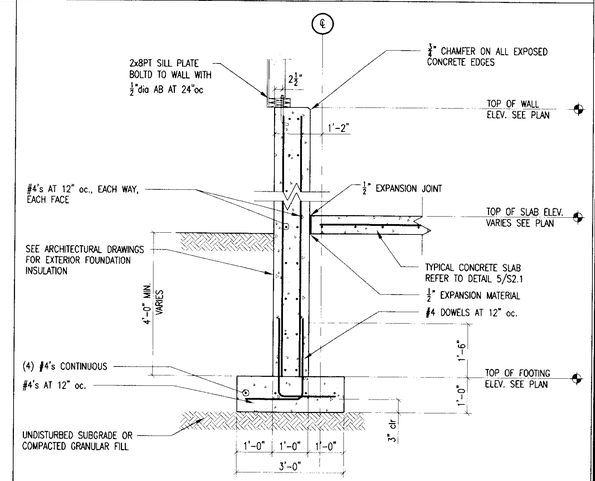

TYPICAL FOUNDATION WALL DETAIL (8)

1/2" = 1'-0"

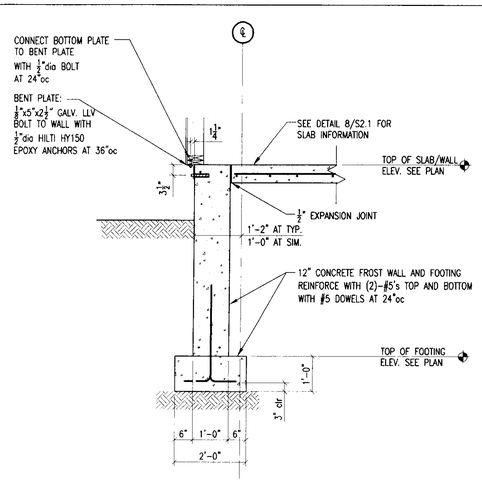

DETAIL AT DMV AND END WALLS (9)

1/2" = 1'-0"

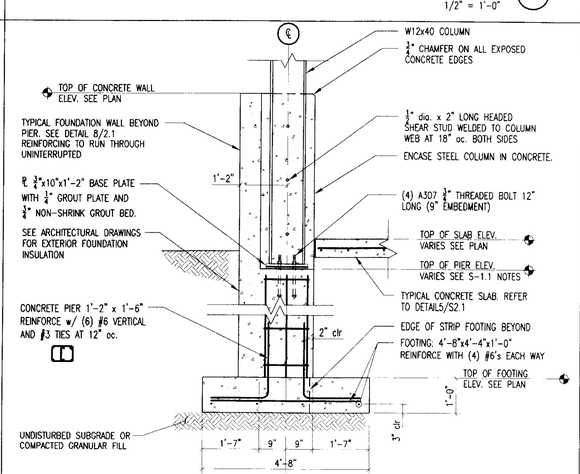

TYPICAL COLUMN PIER AND FOOTING DETAIL AT MAINTENANCE AREA (10)

1/2" = 1'-0"

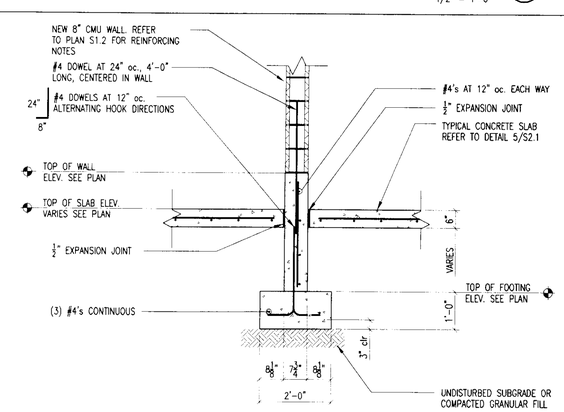

TYPICAL INTERIOR STRIP FOOTING DETAIL (11)

1/2" = 1'-0"

DETAIL NOT USED (-)

1/2" = 1'-0"

208 Flynn Avenue, Suite 3A
Burlington, VT 05401
Ph: (802) 863-6303
Fax: 802.863.6306
EngineeringVentures.com
ENGINEERING VENTURES INC

1796 WILLISTON RD, STE 300
S. Burlington, VT 05403
Phone: (802) 863-0488
Fax: (802) 863-0860

29 WASHINGTON ST, STE 204
MONTPELIER, VT 05602
Phone: (802) 229-0568
Fax: (802) 229-2594

1400 BANCROFT STREET
WINDSOR, VT 05089
Phone: (802) 674-6789
Fax: (802) 674-6789

D&W
DORE AND WHITTIER, INC.
Architects • Project Managers

STATE OF VERMONT
DEPARTMENT OF BUILDINGS AND GENERAL SERVICES
AGENCY OF ADMINISTRATION
MONTPELIER, VERMONT

AGENCY OF TRANSPORTATION
N. FERRISBURGH MAINTENANCE FACILITY
NORTH FERRISBURGH VERMONT

REVISIONS

SCALE: AS NOTED	
DATE: 01/04/06	
DRAWN BY: JML	
APPR. BY:	

N. FERRISBURGH

MAINTENANCE GARAGE

STRUCTURAL DETAILS

S-2.1