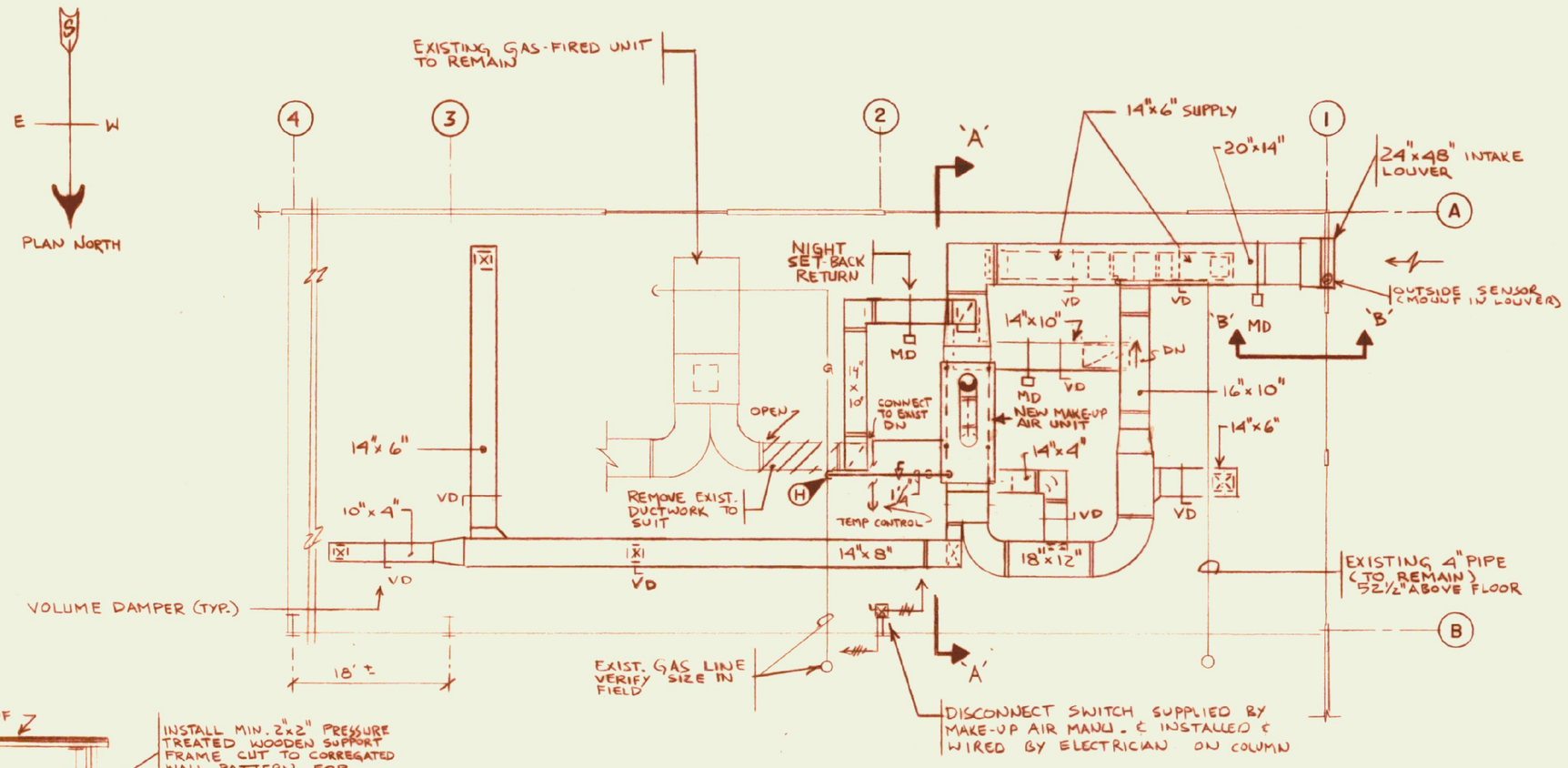

MECHANICAL SPACE ABOVE ROOMS BELOW

SCALE: 1/4" = 1'-0"

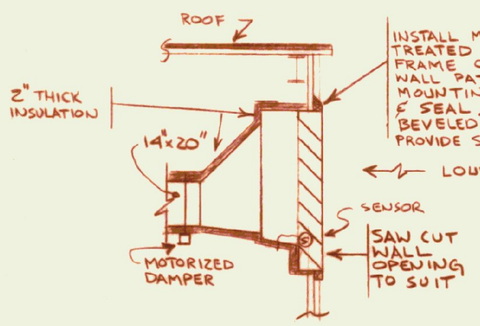

SECTION 'B'-'B'

NOT TO SCALE

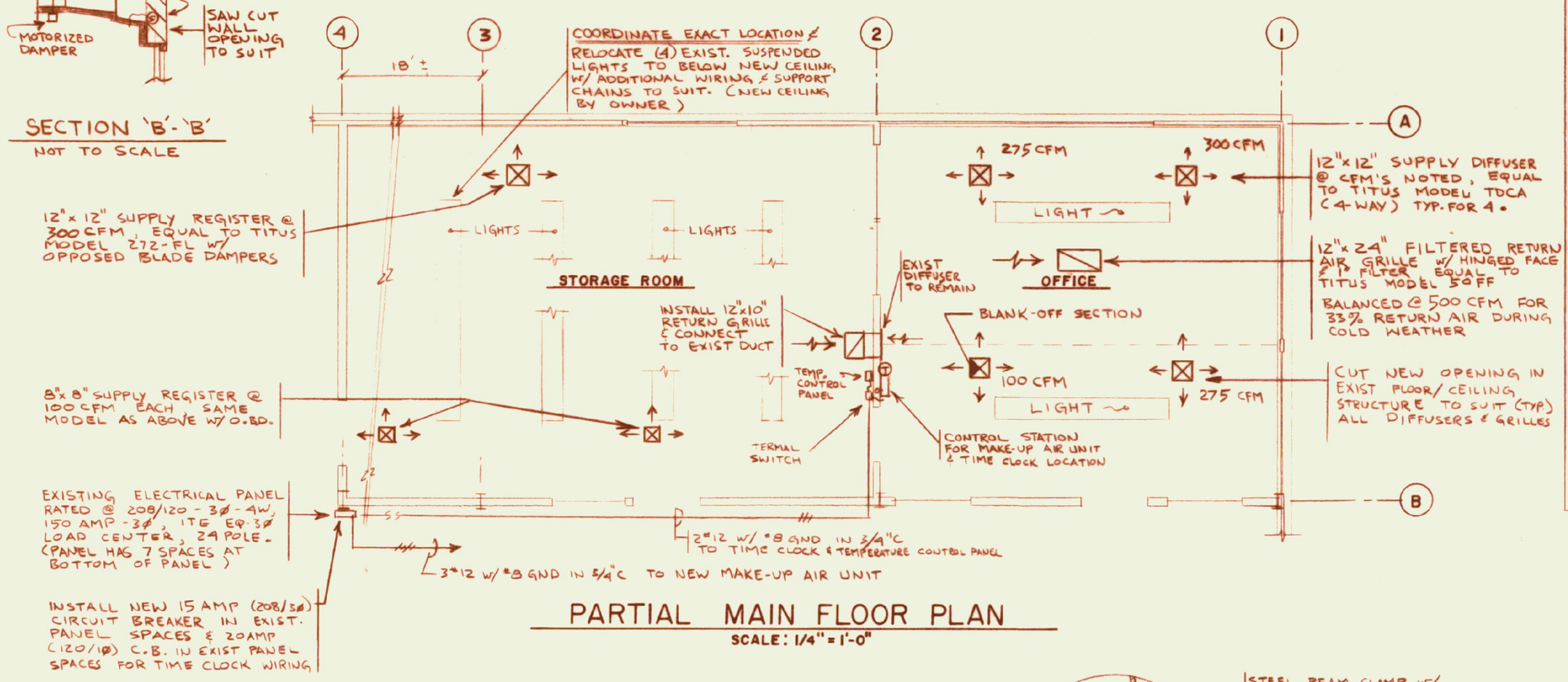

PARTIAL MAIN FLOOR PLAN

SCALE: 1/4" = 1'-0"

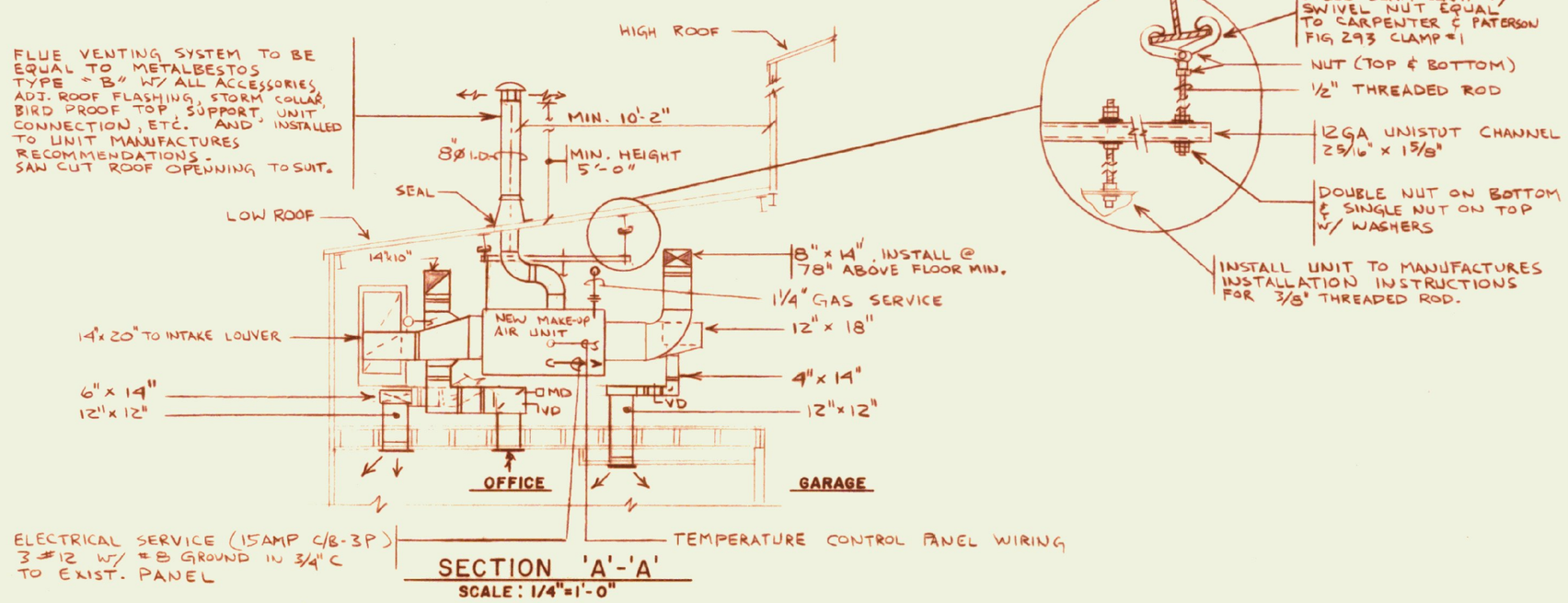

SECTION 'A'-'A'

SCALE: 1/4" = 1'-0"

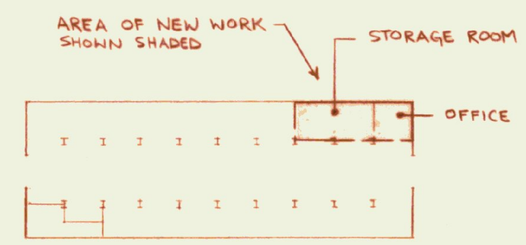

BUILDING #5 - DPW MAIN FLOOR PLAN

SCALE: 1" = 50'

HEATING AND VENTILATING SPECIFICATIONS

GENERAL PROVISIONS

A. Applicable Provisions of "General Conditions of Contract" and "Supplementary General Conditions" govern work under this Section.

B. The Heating and Ventilating Contractor for this Project is to be a bonafide Mechanical Contractor for all Heating and Plumbing work.

SCOPE OF WORK

A. The work required under this Section shall include all new materials, labor, equipment and services necessary to furnish and completely install in accordance with the Drawings and Specifications all items listed, but not limited to:

1. Furnishing and installation of gas-fired Heating and Ventilating equipment, insulation, ductwork, access panels, grilles, outside louver, Flue System, etc., as shown on the Plans.
2. Furnish and install a complete Temperature Control System.
3. Balancing of all Ductwork Systems.
4. Furnish and install new gas piping.
5. Provide all electrical items as shown on Drawings and as specified.
6. Provide all cutting and patching as required.
7. Provide all demolition of existing items as shown on Drawings and proper removal from Site.

INSPECTION OF THE SITE

A. The Heating Contractor shall thoroughly inspect the existing conditions at the Site, before the formal Bid Submittals are due. He shall compare the Drawings as to the conditions of the premises, any obstructions, the actual elevations, dimensions, location of/or connection to existing facilities and assume all responsibility for same. He shall be held responsible for checking and thoroughly examining the premises for possible interferences caused by existing conditions.

CODES, PERMITS AND FEES

A. This Contractor shall give all Requisite Notices, comply with all necessary codes, file all Requisite Drawings relating to work with the proper authorities and shall secure all approvals, permits and pay all fees for same.

SHOP DRAWINGS

A. Prior to starting work, submit Shop Drawings of all equipment to the Engineer for review. Submit three (3) copies of each item.

CUTTING AND PATCHING

A. Openings where required shall be carefully cut without undue weakening of the structure or damage to the Building. Provide required bracing, shoring, etc., for openings. Patch and replace all work to a condition at least equal to its condition before the cutting was done, use materials and methods approved by the Engineer.

CLEANING AND RUBBISH REMOVAL

A. During the work, keep the premises clear of unnecessary accumulation of debris. On completion of the work, remove all rubbish and debris resulting from the work and lawfully dispose of same. All equipment shall be thoroughly cleaned of accumulated dust or dirt and left in a satisfactory condition for use.

CONTRACTOR'S SUPERVISION

A. The Heating Contractor shall maintain a competent foreman or direct representative on the job who will coordinate all work.

PROTECTION OF WORK AND PROPERTY

A. This Contractor shall be responsible for the care, maintenance and protection of all work included in the Specification and Drawing until accepted by the Owner.

RECORD DRAWINGS

A. The Contractor at the completion of the Contract, shall submit to the Engineer, one (1) set of blue prints showing all changes marked in colored pencil for review.

OPERATING INSTRUCTIONS AND MANUALS

A. The Heating Contractor shall give detailed instructions to the Owner in the operation and maintenance of all work installed under this Contract and provide Owner with one (1) set of all approved installed Shop Drawings and Equipment Instructions, including Parts Lists of major equipment.

GAS PIPING

A. Gas piping shall be Schedule 40 A-120 steel seamless pipe with threaded fittings. Provide gas cock, drip leg and union to all gas-fired equipment. Entire installation to be installed and tested in strict accordance with approved codes.

B. Furnish and install approved support hangers not over 8'-0" on center.

GAS-FIRED MAKE-UP AIR UNIT (NATURAL GAS)

A. Furnish and install one (1) package gas-fired make-up air unit as manufactured by Rennor or approved equal; Model No. XE-175, rated at 175 MBH input, 134.75 MBH output with a 90° temperature rise, 1450 CFM at .6" external static pressure, 860 RPM, 3/4 HP motor, 208 volt THWE phase plus control circuit and all standard features unless noted otherwise under Options below.

B. Furnish with all the following factory-installed Options:

1. E-3 (409) stainless steel heat exchanger
2. Intermittent spark pilot and flame supervision. (Option - PAH2)
3. AG7 Electronic Modulation Gas Control System with remote thermostat
4. Firestat, starter, disconnect switch, 24 volt control transformer
5. Manual summer/winter relay switch and thermostate, night set back (field installed)
6. Insulated blower cabinet, 1" throwaway filters
7. Horizontal inlet and outlet duct flanges
8. Remote console - RC6

C. The manufacturer's Printed Specification of the model used shall hereby become part of this Specification.

LOUVERS

A. Furnish and install one (1) 48" high x 24" wide x 6" deep extruded aluminum louver with 45° angle blades, birdscreen, water stop, mounting 1½" flange with all aluminum construction typical to Ruskin Model No. ELF128. Finish selected by Owner.

DUCTWORK

A. Ductwork material: all ductwork and sheetmetal work that is indicated on the Drawings, specified or required for heating and ventilating shall be constructed of galvanized steel and shall be installed in an approved manner.

B. All sheetmetal work shall be erected in a first-class, workmanship-like manner in accordance with the Sheetmetal and Air Conditioning Contractor's National Association Manual referred to above, unless otherwise specified hereinafter in this Section.

C. All ductwork shall be subject to the approval of the Owner's representative and shall be straight and smooth on the inside, with neatly finished joints. The ducts shall be securely anchored to the building construction in an approved manner, and shall be so installed as to be completely free from vibration under all conditions of operation.

D. All ductwork shall be supported rigidly and be securely braced as specified by means of strap hangers and cross-bracing, and adequately attached by approved means to the structure. Hangers shall not be more than 8'-0" apart.

E. All slip joints shall be made in the direction of flow. All elbows shall be square corner elbows fitted with prefabricated turning vanes as manufactured by Air Devices, Inc., or equal unless round. Each branch duct shall be provided with a volume damper with operating, locking quadrant.

F. All notches for connecting sections of duct, and all grooving seam notches shall not be cut any deeper than necessary to ensure tight corners. Any notched corners no meeting with the approval of the Owner's representative shall be removed and reinstalled or sealed with solder to the approval of the Owner's representative.

G. Cleaning: before the Duct Systems are tested and balanced, the interiors of all ducts shall be cleaned thoroughly so that no dirt, dust or other foreign material can be deposited in or carried through the Systems or discharged through the outlets. Cheesecloth shall be secured over each opening for entraining such particles during the cleaning.

GRILLES AND REGISTERS

A. Registers shall be of the type specified and located where shown on the Plans. Registers shall be as manufactured by Titus, Tuttle & Bailey or Carnes.

Note: Finishes shall be as selected by Owner.

MANUAL VOLUME DAMPERS (ABBREVIATED V.D. ON PLANS)

A. Duct Systems shall have sufficient volume dampre, whether or not shown, to control and adjust the total volume of each System, each zone, in each branch and at each diffuser or grille. Volume dampers shall be of the butterfly type with 18 ga. galvanized iron blade. All dampers shall be equipped with Duro-Dyne, Type UNILD locking quadrant. Dampers 25" in width and longer shall be provided with damper bearings on each end of the shaft. Bearings shall extend through ducts with the one opposite quadrant, mounted on a 2" x 3" x 1/8" plate held to duct with sheetmetal screws. Maximum width of single blades shall be 14".

Time Clock

A. Furnish and Install a seven day programmable time clock with battery back-up where shown on drawings.

B. Timer to be provided with min. terminal strips and relay switches as required for occupied/unoccupied damper & thermostat settings plus at least 2 spare sets of contacts and override switches. (T'STATS 24V)

C. Time Clock to be manufactured by Tork or approved equal.

DUCTWORK INSULATION

A. Fresh air intake, (2" insulation); supply and return ductwork shall be insulated with 1" thick fiberglass-type 11, foil reinforced, adhered with sta-clips and taped joints no less than one (1) per square foot. Manufacturer sshll be Owens-Corning, Armstrong or Johns-Manville.

DAMPER ACCESS DOORS

A. Provide insulated and gasketed dampers access doors in ducts at each motor operated damper. Access doors shall be 12" x 10" unless otherwise indicated in size and shall be commercially air-tight in construction. Access doors shall be Cesco, Inc., 1" thick, Model HAD-10 hinged and canned typed or approved equal.

TURNING VANES

A. Double radius tpe turning vanes constructed of not less than 22 ga. aluminum shall be provided in all abrupt turns. Vanes shall be products of the Titus Manufacturing Corporation or approved equal.

AUTOMATIC TEMPERATURE CONTROL

A. The temperature control equipmetn shall be as manufactured by make-up air unit manufacturer, Honeywell, Johnson Service Co. or Penn Controls and installed by competent technicians.

B. Furnish and install a System of Electric-Electronic Temperature Controls to meet the intent of the Specification as described herein.

C. Control motorized dampers to be by Ruskin, Model #CD-50, low leak extruded aluminum with airfoil shape blades or equal.

D. Packaged make-up air unit to be controlled by a remote control station (by unit manufacturer - see Specification) with thermostat and night set-back controls with override switch. Space temperature to be maintained at 70°F (adjustable) during occupied cycle and 50°F (adjustable) during unoccupied cycle. During occupied hours, outside air damper to be opened at 100% when outside air is above 5°F and return air damper closed. When outside air temperature is below 5°F, outside air damper to be opened to 66% and one (1) return air damper (14" x 10") opened fully; second return air damper closed. During night set-back, outside air damper to be closed and both return air dampers opened 100%.

All temperature control wiring to be in minimum ½" and galvanized conduit. Conduit in occupied rooms to be installed in wall cavity.

E. Install firestat on make-up air unit.

F. FURNISH & INSTALL 7-DAY TIME CLOCK (SEE SPEC.)

BALANCING OF AIR SYSTEMS

A. This Sub-Contractor shall balance all Supply and Return Air Systems to be within 10% of the required CFM's for each grille, register or diffuser as shown on the Plans.

B. All fans shall operate at their design speed and shall not operate with objectionable noise.

C. All motors shall operate less than their rated HP and within their temperature rise rating.

D. Balancing Reports shall be submitted, two (2) copies, to the Engineer for his review.

QUIET OPERATION

A. All Systems and equipment shall operte under all conditions of load without objectionable noise or vibration. Sound and vibration considered objectionable by the Owner will be corrected in an approved manner by this Contractor at his own expense.

LUBRICATION

A. All items requiring lubrication of any kind shall be left freshly and fully lubricated at the completion of the Project.

WARRANTIES

A. The Heating Contractor shall obtain and submit to the Owner any guarantees available from equipment manufacturers.

ELECTRICAL

A. Entire wiring installation to comply with NEC, all applicable State, Federal and local codes and to the approval of the Engineer.

B. All power wiring to run in minimum of 3/4" galvanized conduit and be minimum (98% copper), #12 AWG with THHN or THWN type insulation or approved equal.

C. All control wiring of 24 volt circuits to be wired with minimum #14 AWG - THHN/THWN in ½"ø conduit.

D. All Wiring Systems to be properly grunded per NEC Article 250.

E. Furnish and install new circuit breaker in existing panel of type to match existing and sized as noted on Drawing.

N.F. LAURENCE and ASSOCIATES, INC.
CONSULTING ENGINEERS
113 WEST MAIN STREET
NORTHBOROUGH, MASSACHUSETTS 01532

STATE OF VERMONT
DEPARTMENT OF STATE BUILDINGS
AGENCY OF ADMINISTRATION
MONTPELIER. VERMONT

DISTRICT Nº 5 BUILDING - D.P.W.
FORT ETHAN ALLEN, ESSEX JCT., VT.

HEATING & VENTILATING SYS.
FOR OFFICE/STORAGE AREA, PLAN & SPEC.

DATE:	SCALE:	REVISIONS:	DWG. NO.
3-17-95	AS NOTED		HV-1
DRAWN BY: KA	APPROVED BY: NFL		1 OF 1