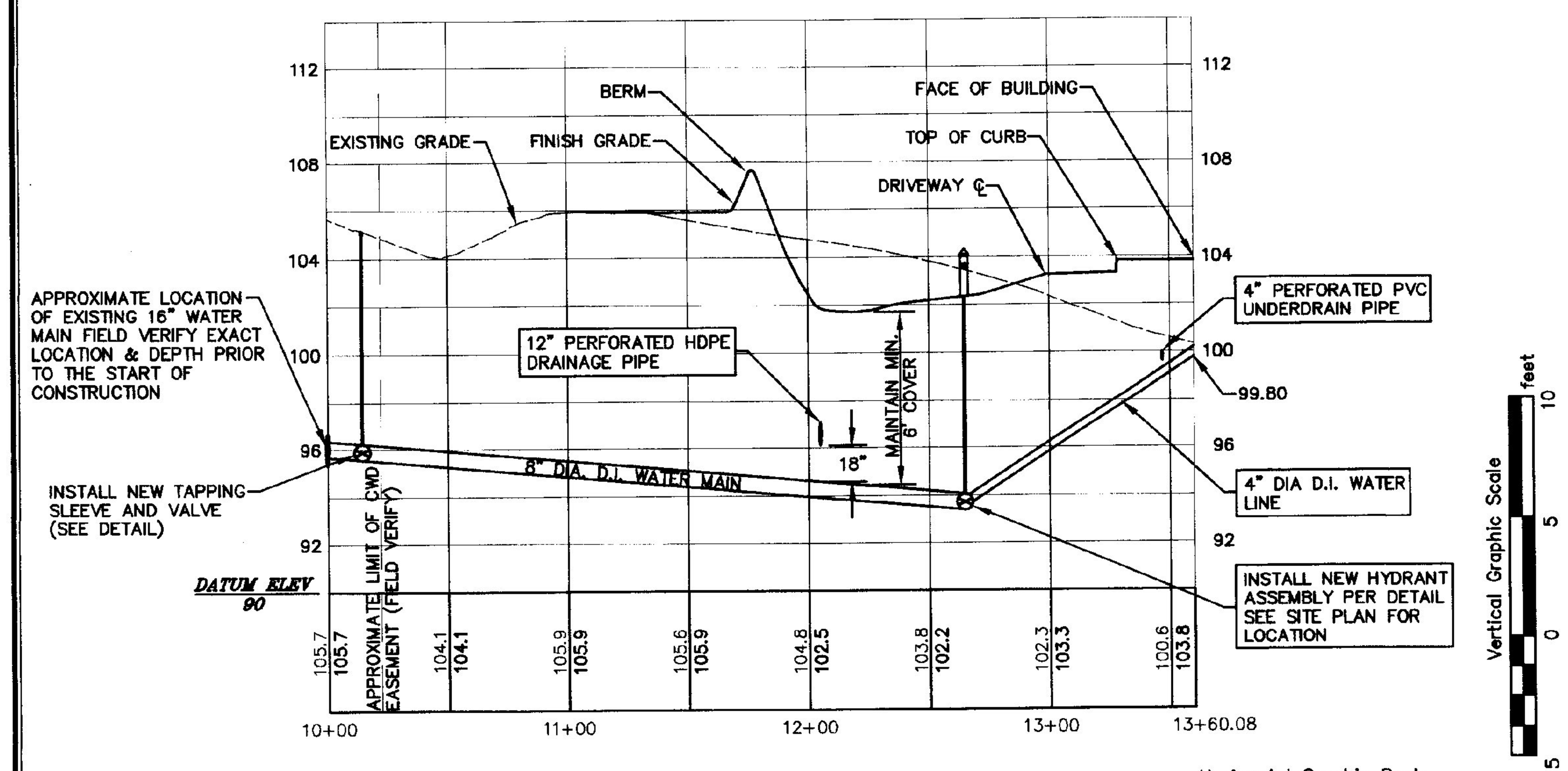

1 WATER SERVICE PROFILE

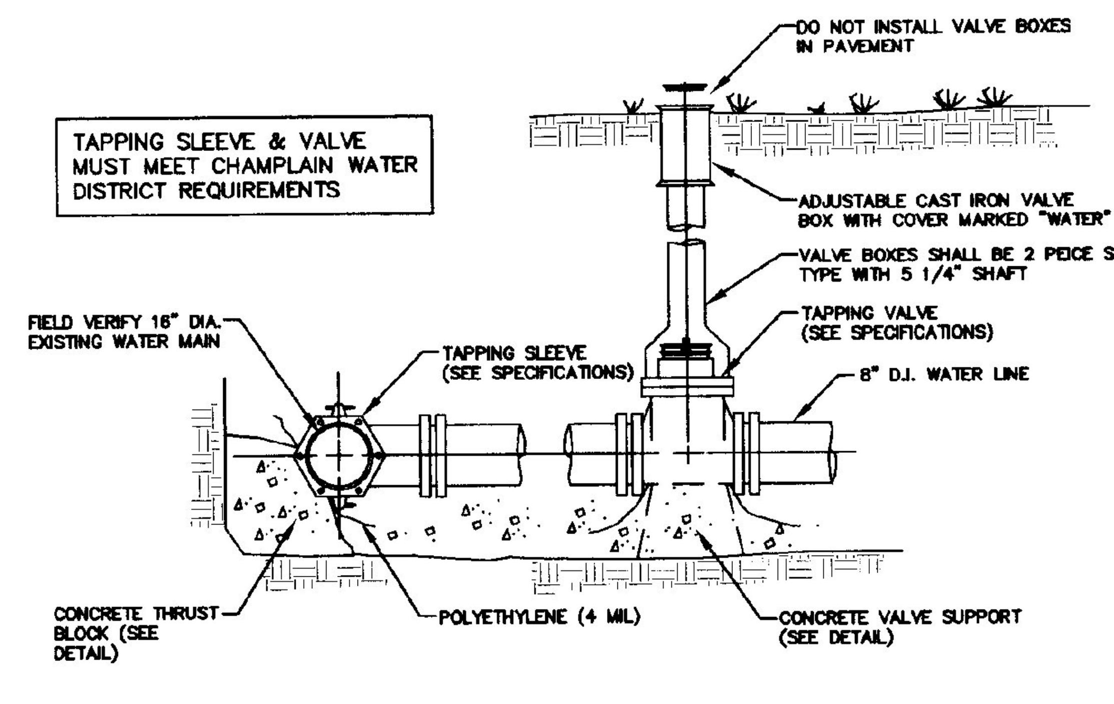

2 TAPPING SLEEVE & VALVE

N.T.S.

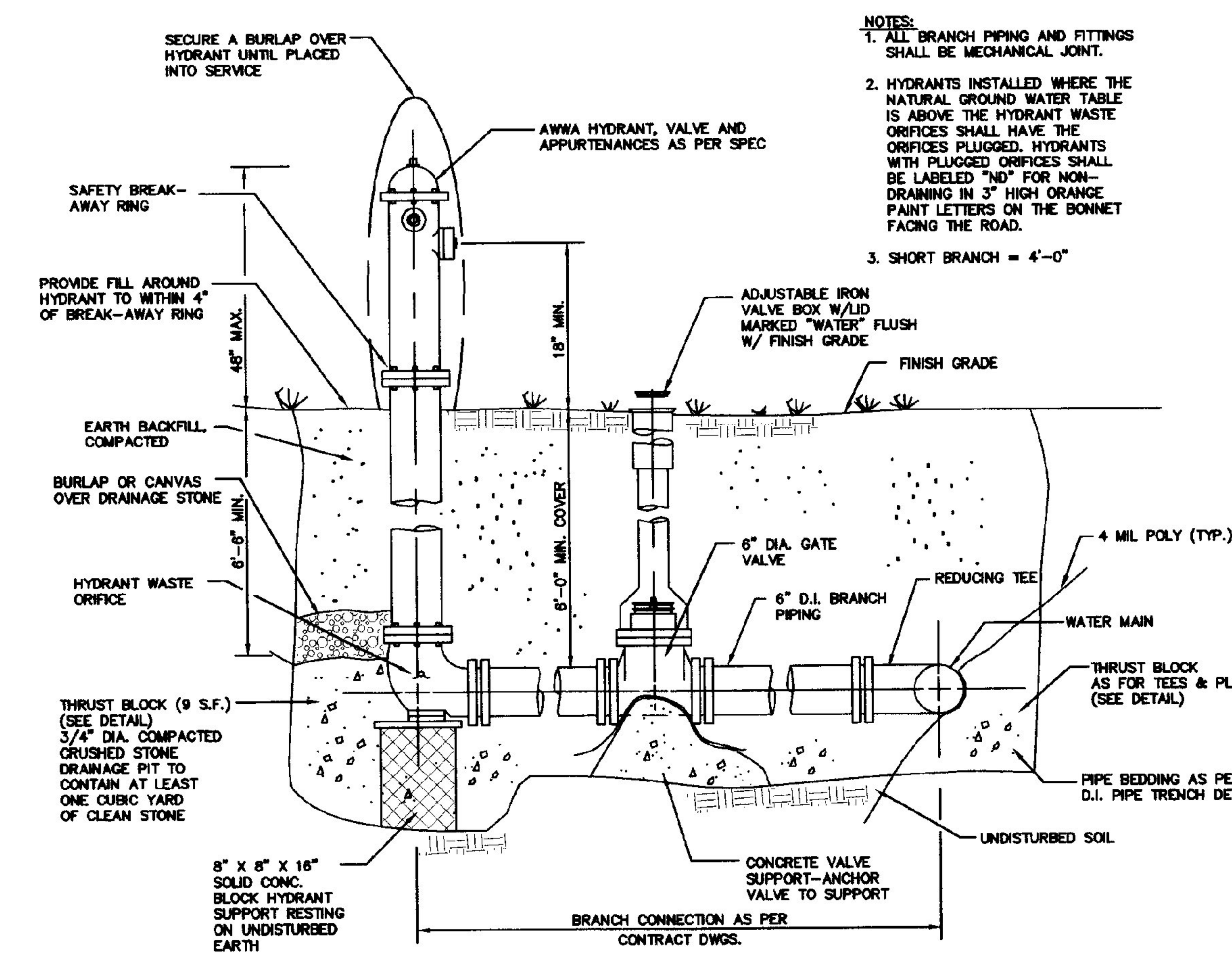

NOTES:
1. ALL BRANCH PIPING AND FITTINGS SHALL BE MECHANICAL JOINT.
2. HYDRANTS INSTALLED WHERE THE NATURAL GROUND WATER TABLE IS ABOVE THE HYDRANT WASTE ORIFICES SHALL HAVE THE ORIFICES PLUGGED. HYDRANTS WITH PLUGGED ORIFICES SHALL BE LABELED "ND" FOR NON-DRAINING IN 3" HIGH ORANGE PAINT LETTERS ON THE BONNET FACING THE ROAD.
3. SHORT BRANCH = 4'-0"

3 HYDRANT DETAIL

N.T.S.

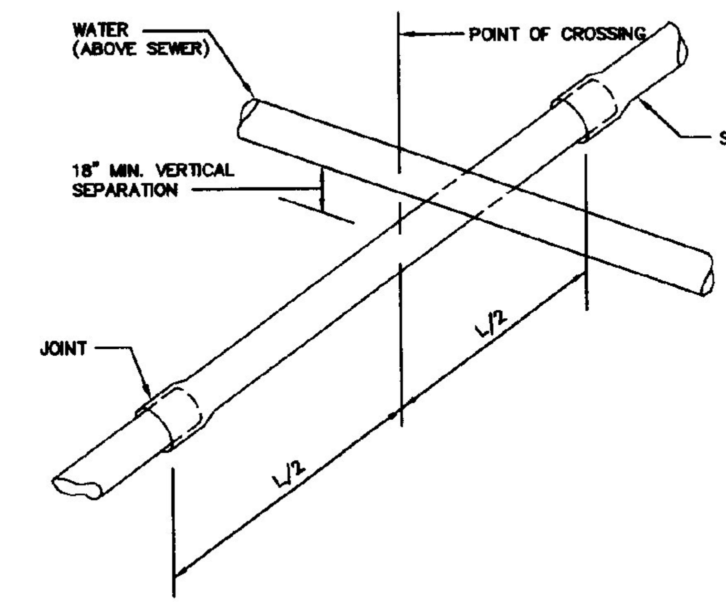

4 TYPICAL WATER/SEWER CROSSING DETAIL

N.T.S.

NOTES:

SEWERS CROSSING WATER MAINS SHALL BE LAID BENEATH THE WATER MAIN WITH AT LEAST 18 INCHES VERTICAL CLEARANCE BETWEEN THE OUTSIDE OF THE SEWER PIPE AND THE OUTSIDE OF THE WATER MAIN. WHEN IT IS IMPOSSIBLE TO MAINTAIN THE 18 INCH VERTICAL SEPARATION:

1. THE CROSSING SHALL BE ARRANGED SO THAT ONE FULL LENGTH OF SEWER PIPE IS CENTERED ABOVE OR BELOW THE WATER LINE WITH SEWER JOINTS AS FAR AS POSSIBLE FROM WATER JOINTS.

2. THE SEWER PIPE MUST BE CONSTRUCTED TO WATER MAIN STANDARDS FOR A MINIMUM DISTANCE OF 20 FEET EITHER SIDE OF THE CROSSING OR A TOTAL OF THREE PIPE LENGTHS, WHICHEVER IS GREATER.

3. THE SECTION CONSTRUCTED TO WATER MAIN STANDARDS SHALL BE PRESSURE TESTED TO MAINTAIN 50 PSI FOR 15 MINUTES WITHOUT LEAKAGE PRIOR TO BACKFILLING BEYOND 1 FOOT ABOVE THE PIPE TO ASSURE WATER TIGHTNESS.

4. WHERE A WATER MAIN CROSSES UNDER A SEWER, ADEQUATE STRUCTURAL SUPPORT SHALL BE PROVIDED FOR THE SEWER TO PREVENT DAMAGE TO THE WATER MAIN.

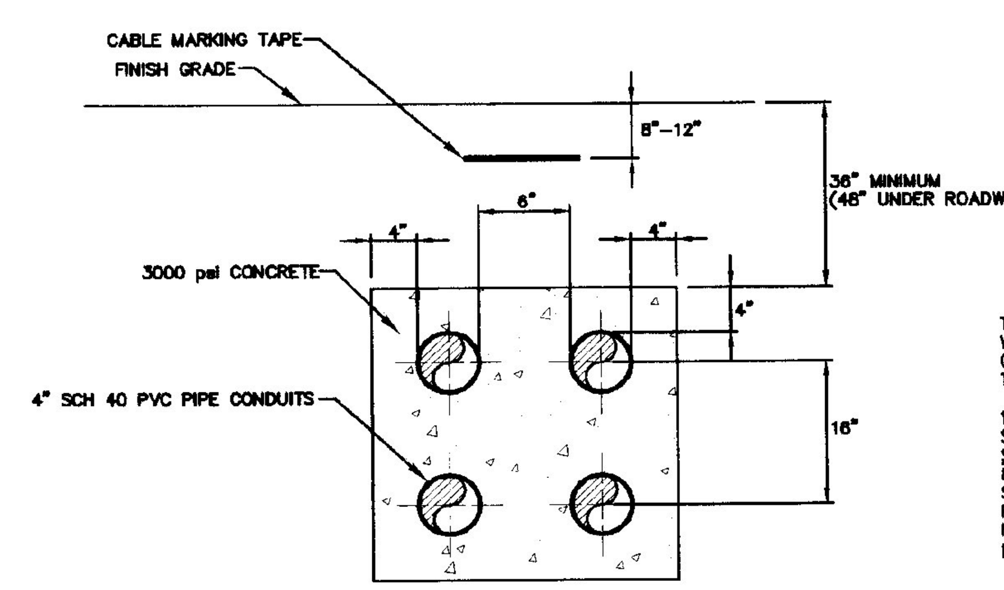

THE GENERAL CONTRACTOR SHALL COORDINATE ALL UTILITY WORK WITH CENTRAL VERMONT PUBLIC SERVICE CORPORATION FOR POWER AND BELL ATLANTIC FOR TELEPHONE.

1. ALL EXCAVATION, CONDUIT INSTALLATION AND BACKFILL SHALL BE IN CONFORMANCE WITH CVPS DISTRIBUTION STANDARDS. CONTACT THE DISTRICT SUPERINTENDENT AT 802-524-5891 TO OBTAIN COPIES OF THE LATEST STANDARDS AND TO COORDINATE INSPECTION OF WORK PERFORMED BY THE GENERAL CONTRACTOR. INSTALLATION NOT INSPECTED AND APPROVED BY CVPS WILL BE EXCAVATED AND REDONE AT THE CONTRACTOR'S EXPENSE.

5 UNDERGROUND ELECTRIC & TELEPHONE CONDUIT ENCASEMENT DETAIL

N.T.S.

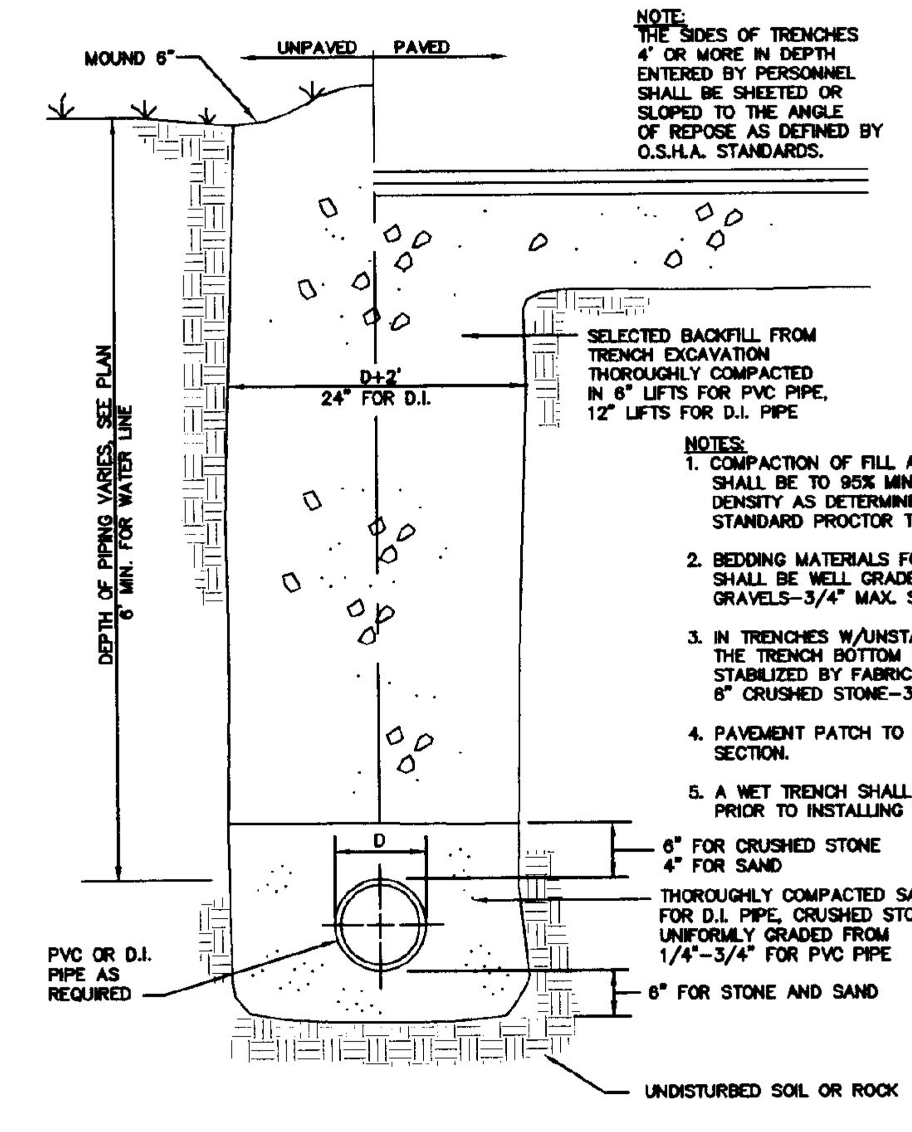

NOTE:
THE SIDES OF TRENCHES 4' OR MORE IN DEPTH ENTERED BY PERSONNEL SHALL BE SHEETED OR SLOPED TO THE ANGLE OF REPOSE AS DEFINED BY O.S.H.A. STANDARDS.

NOTES:
1. COMPACTION OF FILL AND BEDDING SHALL BE TO 95% MIN. OF MAX. DRY DENSITY AS DETERMINED BY THE STANDARD PROCTOR TEST.
2. BEDDING MATERIALS FOR PIPES SHALL BE WELL GRADED SANDS, GRAVELS-3/4" MAX. SIZE.
3. IN TRENCHES W/UNSTABLE MATERIALS, THE TRENCH BOTTOM SHALL BE FIRST STABILIZED BY FABRIC-MIRAFI 500X, AND 6" CRUSHED STONE-3/4" MAX.
4. PAVEMENT PATCH TO MATCH EXISTING SECTION.
5. A WET TRENCH SHALL BE DEWATERED PRIOR TO INSTALLING BEDDING.

6 TYPICAL EXCAVATION TRENCH DETAIL

N.T.S.

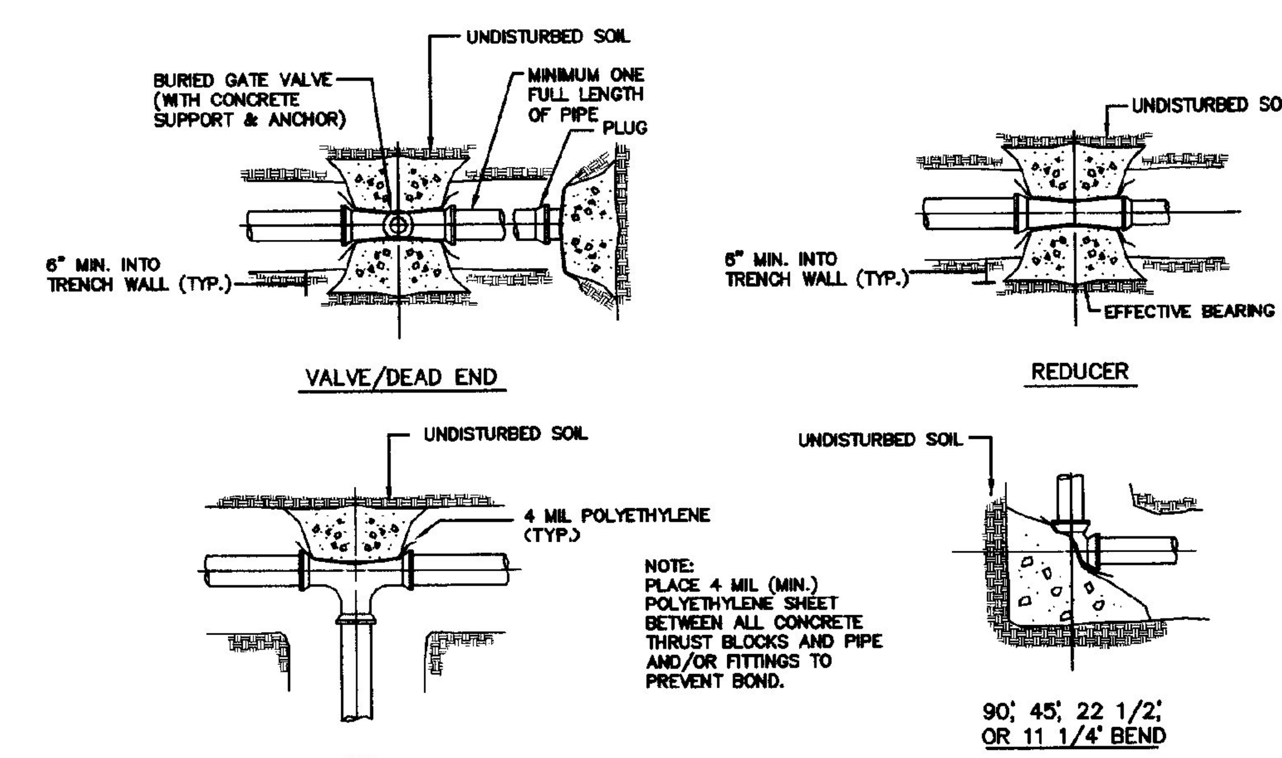

NOTE:
PLACE 4 MIL (MIN.) POLYETHYLENE SHEET BETWEEN ALL CONCRETE THRUST BLOCKS AND PIPE AND/OR FITTINGS TO PREVENT BOND.

7 THRUST BLOCK DETAILS

N.T.S.

MINIMUM AREA OF BEARING SURFACE OF CONC. THRUST BLOCKS (in square feet)

3"				4"				6"				8"				12"					
ENDS & TEES	90° ELB.	45° ELB.	22.5° ELB.	ENDS & TEES	90° ELB.	45° ELB.	22.5° ELB.	ENDS & TEES	90° ELB.	45° ELB.	22.5° ELB.	ENDS & TEES	90° ELB.	45° ELB.	22.5° ELB.	ENDS & TEES	90° ELB.	45° ELB.	22.5° ELB.	SOIL CONDITION	SAFE BEARING LOAD (P.S.F.)
0.5	0.5	0.5	0.5	0.5	1.0	0.5	0.5	1.0	1.5	1.0	0.5	2.0	2.5	1.5	1.0	4.0	5.5	3.0	1.5	SOUND SHALE	10,000
1.0	1.0	1.0	0.5	1.5	2.0	1.0	0.5	3.0	4.0	2.0	1.0	4.5	6.5	3.5	2.0	10.0	14.0	7.5	4.0	CEMENTED GRAVEL & SAND	4,000
1.0	1.5	1.0	0.5	2.0	2.5	1.5	1.0	3.5	5.0	3.0	1.5	6.0	8.5	5.0	2.5	13.0	18.5	10.0	5.0	COARSE & FINE COMPACT SAND	3,000
1.5	2.5	1.5	1.0	2.5	3.5	2.0	1.0	5.5	7.5	4.0	2.0	9.0	13.0	7.0	3.5	20.0	27.5	15.0	8.0	MEDIUM CLAY (CAN BE SPREAD)	2,000
3.0	4.5	2.5	1.5	5.0	7.0	4.0	2.0	10.5	15.0	8.0	4.0	18.0	25.0	14.0	7.0	39.0	55.0	30.0	15.0	SOFT CLAY	1,000
MAXIMUM WATER PRESSURE = 300 P.S.I. NOTE: REDUCER BEARING AREA = 45 BEND, LARGER PIPE																					

Water Specifications

This item shall consist of the excavation and backfilling required for the complete construction of the water mains and services. This shall include valves, fittings, hydrants and all other appurtenances necessary to complete the water main system as located on the drawings. All materials and installation shall be in accordance with the Town of Colchester Public Works Standards and Chapter 21 of the Environmental Protection Rules (Water Supply Rules – Part 8).

1. Materials:

a. Ductile Iron Water Pipe: Pipe shall be eight-inch and four inch diameter Tyton Ductile Iron Class 52 conforming to current ANSI/AWWA C151/ A21.51-81. Push-on joint pipe shall be minimum thickness Class 52. Push-on joint accessories shall conform to applicable requirements of ANSI/AWWA C111/A21.11.

Pipe shall be cement mortar lined on the inside in accordance with ANSI/AWWA C104/A21.4 except that the cement lining thickness shall not be less than three-sixteenths inch (3/16"). A plus tolerance of one-eighth inch (1/8") will be permitted.

Pipe outside coating shall be an asphaltic coating approximately 1 mil thick. The coatings shall be applied in accordance with The Handbook for Ductile Iron Pipe.

b. Fittings: Ductile Iron fittings shall conform to AWWA/ANSI-C104, Class 350 pounds working pressure, and be of a compact body design.

c. Gate Valves Resilient Seat: Valves shall be manufactured to meet all requirements of AWWA Specification C509 (latest version). Valves 12 inces and smaller shall be bubble tight, zero leakage at 200 psi working pressure. Valves shall have non-rising stems, open counterclockwise and be provided with a two-inch (2") square operating nut with arrow cast in metal to indicate direction of opening.

d. Tapping Sleeves: Sleeves shall be of the split sleeve design, constructed with 2 solid half-sleeves bolted together. Sleeves shall be constructed of cast iron or fabricated steel, and shall have a minimum working pressure of 150 psi. Cast iron sleeves shall have mechanical joint ends with side gasket seals. Fabricated steel sleeves shall have end and side gasket seals and all exterior exposed surfaces shall be fusion bonded epoxy coated to a minimum of 10 mil thickness where the branch outlet is not greater than 50% of the main size. An "O" ring seal is acceptable with fabricated steel sleeves.

All bolts and nuts used with the fabricated steel sleeves shall be ANSI Type 204 or 302 stainless steel. All bolts used with all pipe sleeves shall, upon final tightening and testing, be brush coated heavily with bitumastic cold applied material to thoroughly cover all exposed surfaces of the bolts and nuts.

e. Tapping Valves: Valves shall conform to AWWA C500.86 Standard for Gate Valves. Valves shall open counterclockwise and shall have a minimum working pressure of 150 psi. Inlet flange shall be Class 125 conforming to ANSI Specification B16.1 and outlet connection shall be as specified on the Contract Drawings for the type of pipe required for the branch or lateral pipeline. Buried tapping valves shall be provided with a two inch (2") square wrench nut and shall be installed with a cast iron valve box as required to allow positive access to the valve operating nut at all times.

Each valve shall have the maker's name, pressure rating, and year in which manufacturer cast on the body. Prior to shipment from the factory, each valve shall be tested by hydrostatic pressure equal to twice the specified working pressure. Buried valves shall be installed with a valve box.

f. Valve Box: Cast Iron New England style slide-type; five and one-quarter inch (5 1/4") shaft; 5 inch by 6 foot.

Cover shall be cast iron, marked "WATER" and indicating direction of opening.

g. Hydrants: Mueller or Kennedy M/J Shoe N 5 1/4 A, 24015 I.M.P. with six foot (6') bury and National Standard Thread. The hydrant Shall have at least twelve inches (12") between the bottom of the steamer cap and the ground. Verify hydrant requirements with the Town of Colchester Fire Department.

2. Installation

a. All pipe and fittings shall be inspected and tested in accordance with the manufacturer's specifications and the aforementioned AWWA Specifications. The Contractor shall furnish for approval certification from the pipe manufacturer that all tests have been performed with satisfactory results. Pipe shall not be installed without the Engineer's or the Town of Colchester Fire Department's approval.

b. Pipe, fittings, and accessories shall be carefully handled to avoid damage. Prior to the date of acceptance of the project work by the Owner, the Contractor shall replace any new pipe or accessory found to be defective at any time, including after installation, at no expense to the Owner. All installation and testing shall be done in accordance with AWWA Standard C600-93 and ANSI Specification A21.11.

c. All pipe showing cracks shall be rejected. If cracks occur in the pipe, the Contractor may, at his own expense and with the approval of the Engineer, cut off the cracked portions at a point at least 12 inches from the visible limits of the crack and use the sound portion of the pipe. Conductivity wedges shall be installed at all joints. Three per joint (min.)

d. All pipe and fittings shall be cleared of all foreign matter and debris prior to installation and shall be kept clean until the time of acceptance by the Owner.

e. At all times, when the pipe laying is not actually in progress, the open ends of the pipe shall be closed by temporary watertight plugs or by other approved means. If water is in the trench when work is resumed, the plug shall not be removed until all danger of water entering the pipe has passed. The pipe shall be installed in trenches and at the line and grade shown on the Contract Drawings. Any deflection joints shall be within the limits specified by the manufacturer.

f. All piping and appurtenances connected to the equipment shall be supported so that no strain will be imposed on the equipment. (If the equipment manufacturer's specifications include that piping loads are not to be transferred, the Contractor shall submit certification of compliance).

g. Concrete thrust blocks shall be installed on all plugs, tees, and bends deflecting 11 1/4 degrees or more. Care shall be taken to ensure that concrete will not come in contact with flanges, joints, or bolts. The required area of thrust blocks are indicated on the plans or shall be as approved by the Engineer.

h. A minimum 18 inch vertical separation between the outside pipe surfaces shall be maintained where force mains cross water mains. Force mains shall cross water mains at or near right angles with one full length of water pipe centered on the force mains so both end joints are at maximum separation from the force main. Special structural support for the water main and the force main may be required.

i. There shall be no physical connection between the distribution system and any pipes, pumps, hydrants, or tanks which are supplied or may be supplied with a water that is, or may be contaminated.

j. All trenching safety standards shall be in conformance with all applicable State and Federal guidelines and as specified on the plans.

k. The Contractor shall, at all times, keep the trenches entirely free of water until all work is finished and trenches are ready for backfilling.

l. Valve boxes are to be installed on all buried valves. The boxes shall be cast iron with a minimum 5 1/4" diameter and long enough to extend from the valve to finished grade. The boxes shall enclose the operating nut and stuffing box of the valves. Valve boxes shall not transfer loads onto the valve.

Covers shall be close fitting and dirt tight with the top of the cover flush with the top of the box rim. Covers shall be marked "WATER" with an arrow indicating direction of opening.

m. Chlorination of the water service shall be conducted only after the service has been flushed and a clear stream is obtained as determined by the Engineer. All chlorination testing shall be done by an independent third party approved by the Engineer and the Town of Colchester.

The Contractor shall furnish all labor, equipment, materials, and tools necessary to disinfect the pipe and appurtenances in accordance with the AWWA Standard for Disinfecting Water Mains C651-86 (tablet method not acceptable).

The method of disinfection shall be by the continuous feed method unless otherwise approved by the Engineer. After filling, flushing, and addition of chlorine solution, the chlorine concentration within the pipe shall be at least 10 mg/l. All disinfection shall be performed under the supervision of the Engineer. The disinfection process shall be deemed acceptable only after two samples of water from the flushed disinfected main show no evidence of bacteriological contamination.

n. The Contractor shall furnish all gauges, testing plugs, caps, and all other necessary equipment and labor to perform a pressure test. All pressure testing shall be done by an independent third party approved by the Engineer and the Colchester Fire Department. The Contractor shall develop and maintain for two hours, 150 percent (150%) of the working pressure measured in pounds per square inch (200 psi – minimum). Failure to hold the designated pressure for the two hour period constitutes a failure of the section tested. No pipe installation shall be accepted if the leakage is greater than that determined by the following formula:

$$L = \frac{ND\sqrt{P}}{7,400}$$

Whichever is Less

$$L = \frac{SD\sqrt{P}}{133,200}$$

S = Length of Pipe Testing
L = Allowable Leakage in Gals/HR
D = Nominal Diameter of Pipe (")
P = Average Test Pressure (psi)
N = Number of Joints in the Pipeline Tested

All testing shall be conducted in accordance with AWWA C600-93 latest revision.

o. If there is an area where a cover of five feet (5') cannot be maintained over the water line, the Contractor shall notify the Engineer (in writing) for a revised design.

p. All revisions affecting the water line must be approved by the Department of Environmental Conservation – Water Supply Division. As-Built plans shall be provided to the Water Supply Division and the Town of Colchester Fire Department.

Underground Utilities

For underground electrical and telephone (cable) services, the Contractor shall trench, place bedding, place conduit, and backfill in accordance with the utility company's specifications.

STATE OF VERMONT PAUL DUCHESNEAU No.3567 REGISTERED PROFESSIONAL ENGINEER

SCALE: AS NOTED	REVISIONS 1/18/00 GENERAL REVISIONS
DATE: OCT. 15, 1999	
DRAWN BY: CCE	
APPR. BY:	

AGENCY OF TRANSPORTATION
COLCHESTER MAINTENANCE FACILITY
CHIMNEY CORNERS
COLCHESTER, VERMONT

STATE OF VERMONT
DEPARTMENT OF BUILDINGS AND GENERAL SERVICES
AGENCY OF ADMINISTRATION
MONTPELIER, VERMONT

DORE AND WHITTIER INC.
ARCHITECTS • PROJECT MANAGERS
1795 WILLISTON ROAD • SOUTH BURLINGTON • VERMONT

CHAMPLAIN CONSULTING ENGINEERS
85 PRIM ROAD, P.O. BOX 453
COLCHESTER, VERMONT 05446
(802) 863-6060
(802) 864-1575 FAX

COLCHESTER
MAINTENANCE GARAGE
WATER PROFILE AND DETAILS

C-8