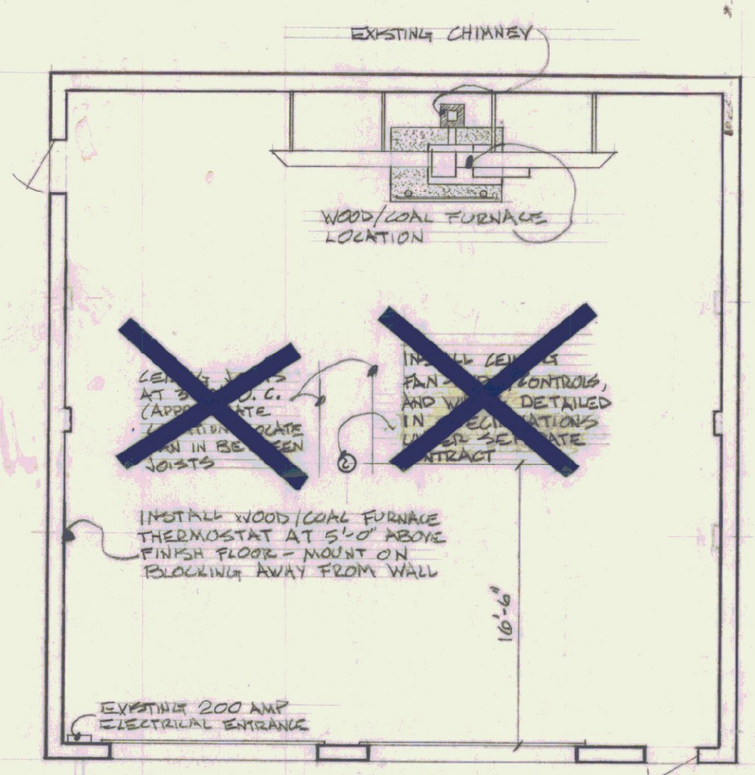

FLOOR PLAN 1/8" = 1'-0"

1. FURNACE CONTRACT - SUPPLY AND INSTALL 150,000 B.T.U. FURNACE AND ALL NECESSARY DUCTWORK AND ELECTRICAL WORK.

2. ALL WIRING TO BE INSTALLED IN E.M.T. ACCORDING TO THE NATIONAL ELECTRIC CODE.

3. A.O.T. FORCES TO INSTALL PAD, FURNACE FOUNDATION, AND BARRICADE.

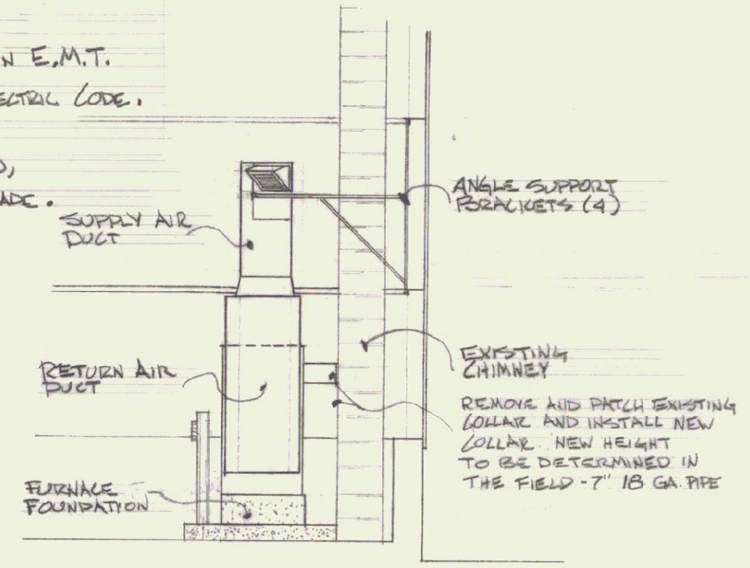

END ELEVATION OF FURNACE 1/4" = 1'-0"

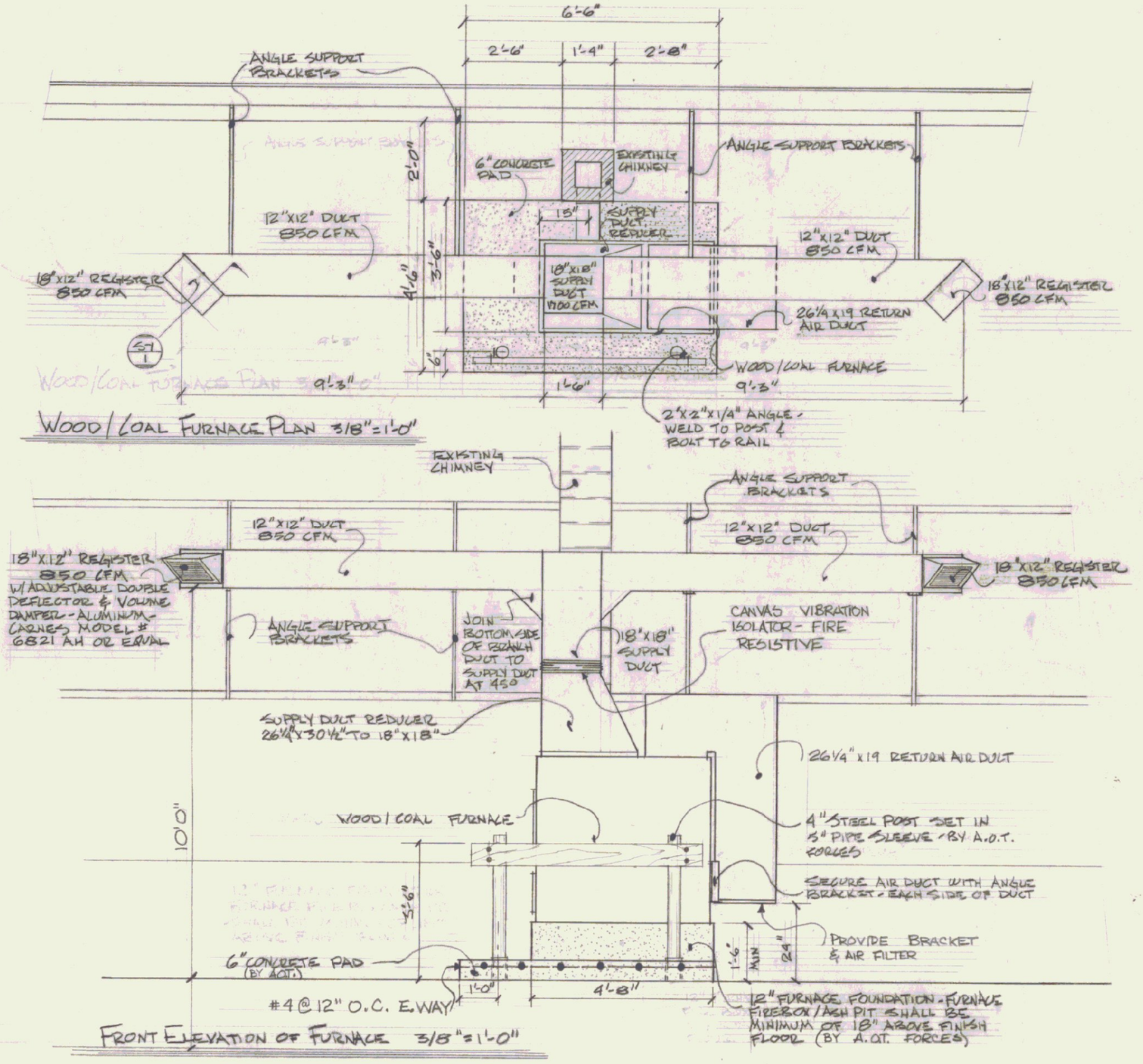

FRONT ELEVATION OF FURNACE 3/8" = 1'-0"

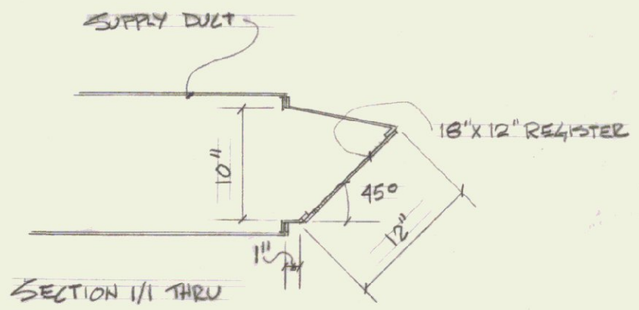

SECTION 1/1 THRU TYPICAL REGISTER DEFLECTOR 1" = 1'-0"

STATE OF VERMONT
DIVISION OF STATE BUILDINGS
AGENCY OF ADMINISTRATION
MONTPELIER, VERMONT

WOODBURNING FURNACE INSTALLATION
AT THE AGENCY OF TRANSPORTATION GARAGE
TUNBRIDGE, VERMONT

DATE: 4-2-81	SCALE: AS SHOWN	REVISIONS:	DWG. NO.
DRAWN BY: HANSON	APPROVED BY: [illegible]		1 OF 1