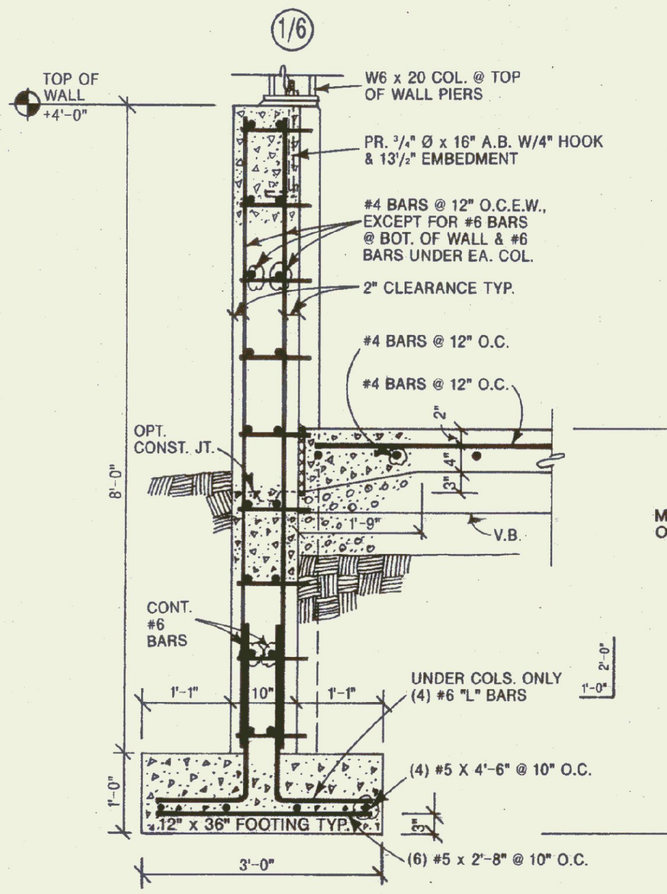

1/6 "1" & 6 LINE WALLS
S-1 SCALE: 3/4" = 1'-0"

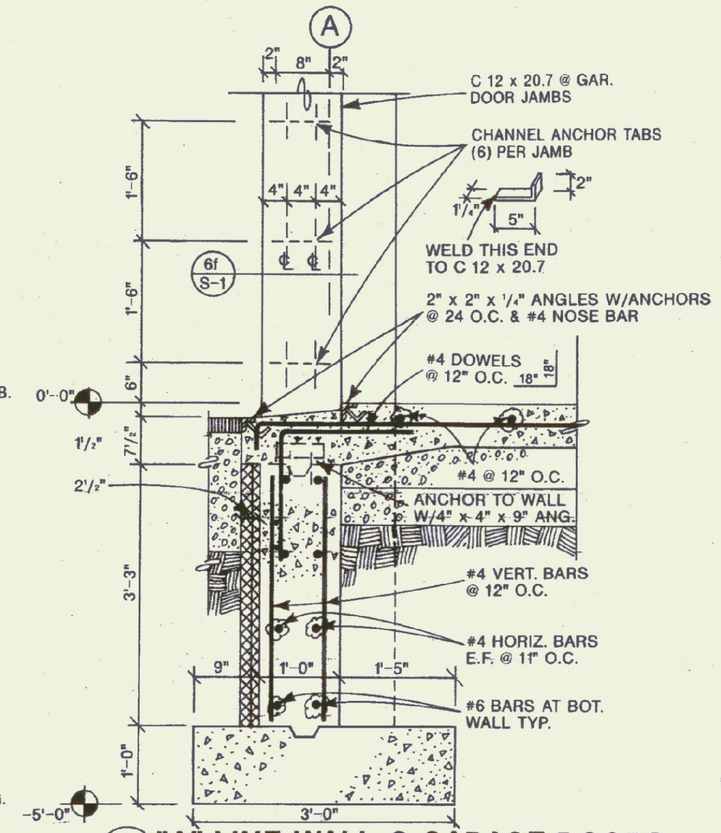

2 S-1 "A" LINE WALL @ GARAGE DOORS
SCALE: 3/4" = 1'-0"

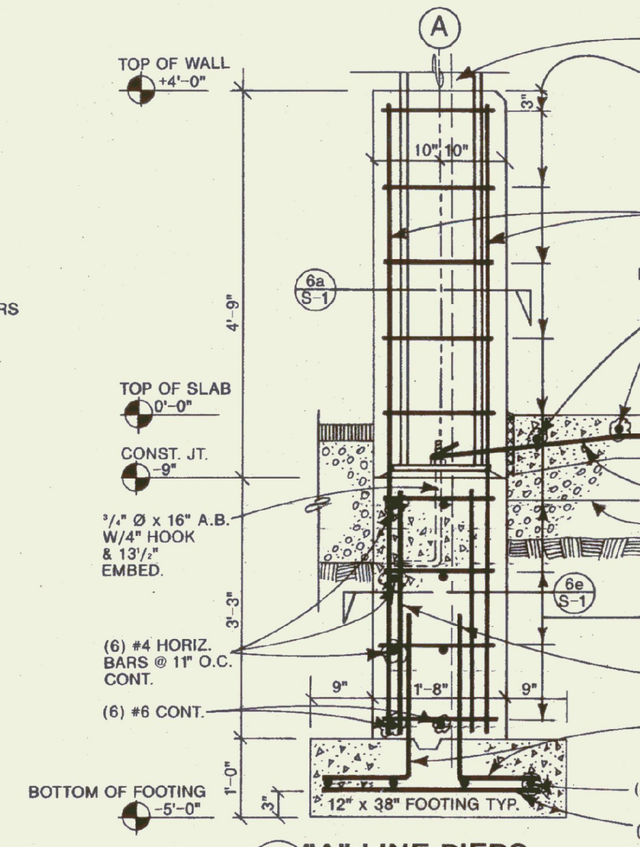

3 S-1 "A" LINE PIERS
SCALE: 3/4" = 1'-0"

4 S-1 "D" LINE PIERS
SCALE: 3/4" = 1'-0"

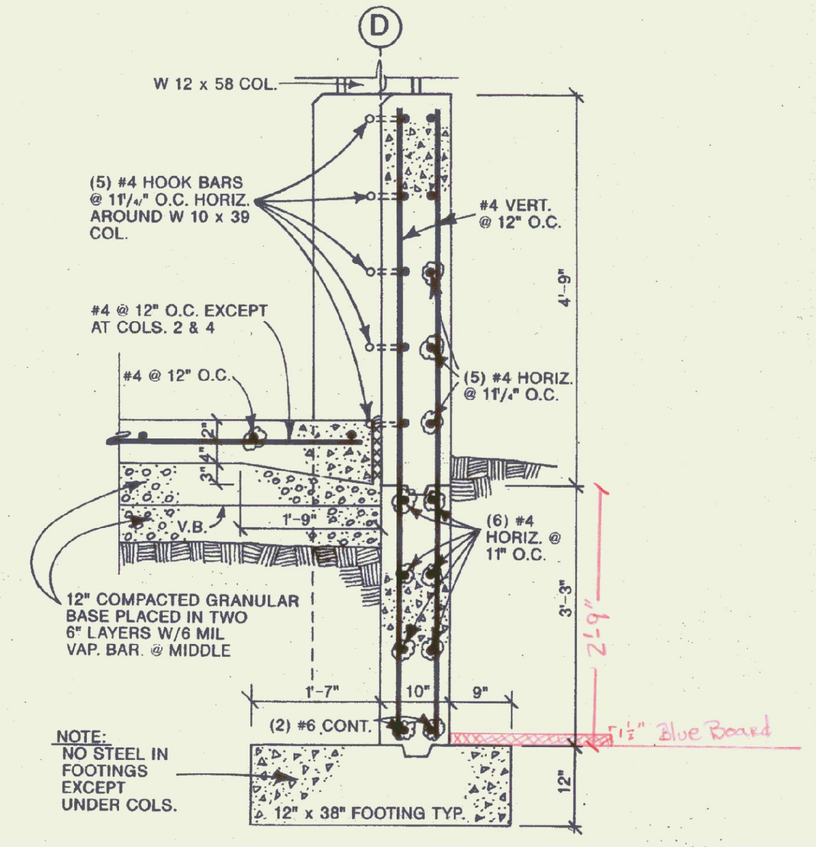

5 S-1 "D" LINE WALLS
SCALE: 3/4" = 1'-0"

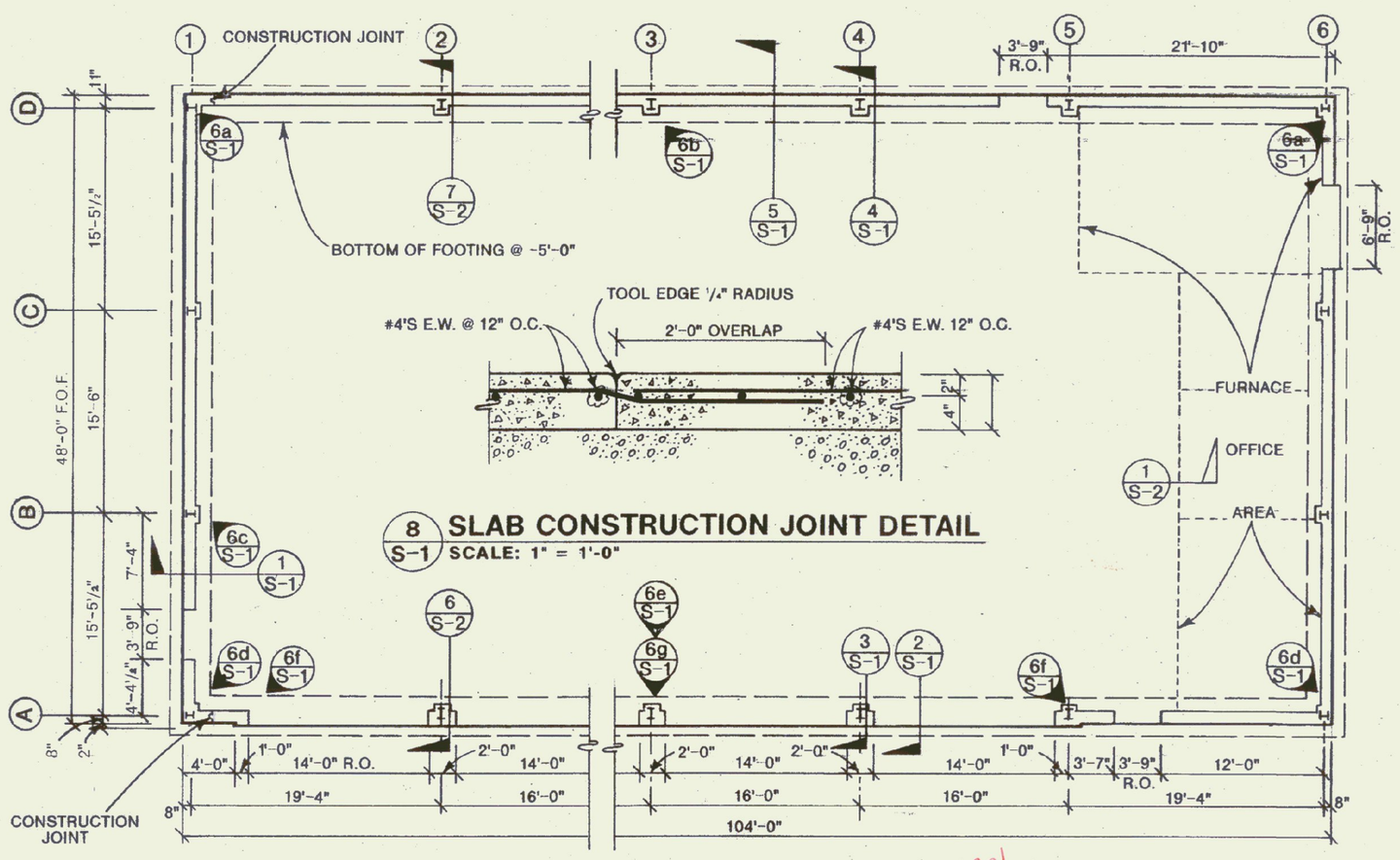

8 S-1 SLAB CONSTRUCTION JOINT DETAIL
SCALE: 1" = 1'-0"

FOOTING & FOUNDATION PLAN
SCALE: 1/8" = 1'-0"

7-col.

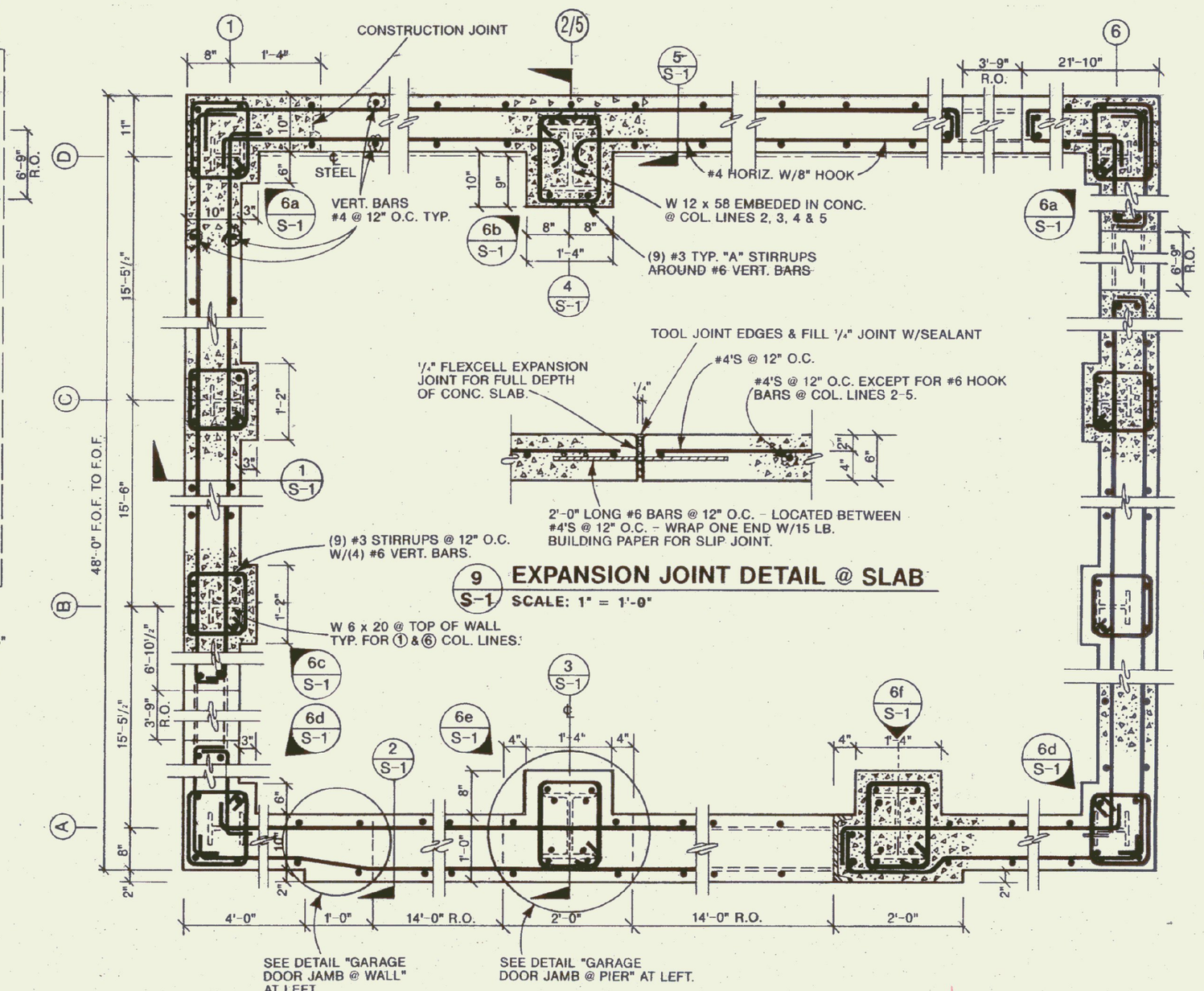

9 S-1 EXPANSION JOINT DETAIL @ SLAB
SCALE: 1" = 1'-0"

DETAIL-FOUNDATION PLANS
SCALE: 3/4" = 1'-0"

7-col.

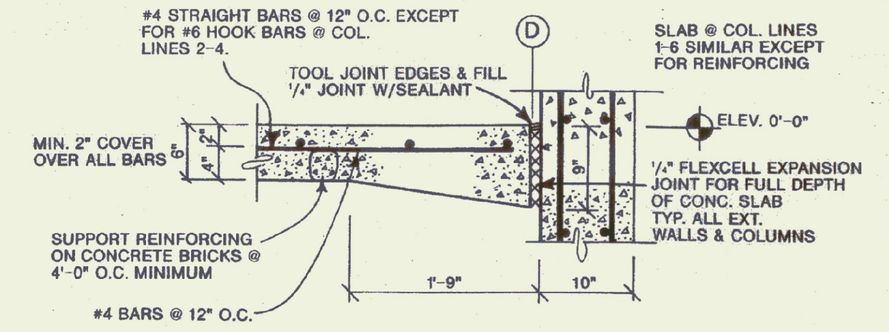

6 S-1 SLAB @ PERIMETER WALLS
SCALE: 1" = 1'-0"

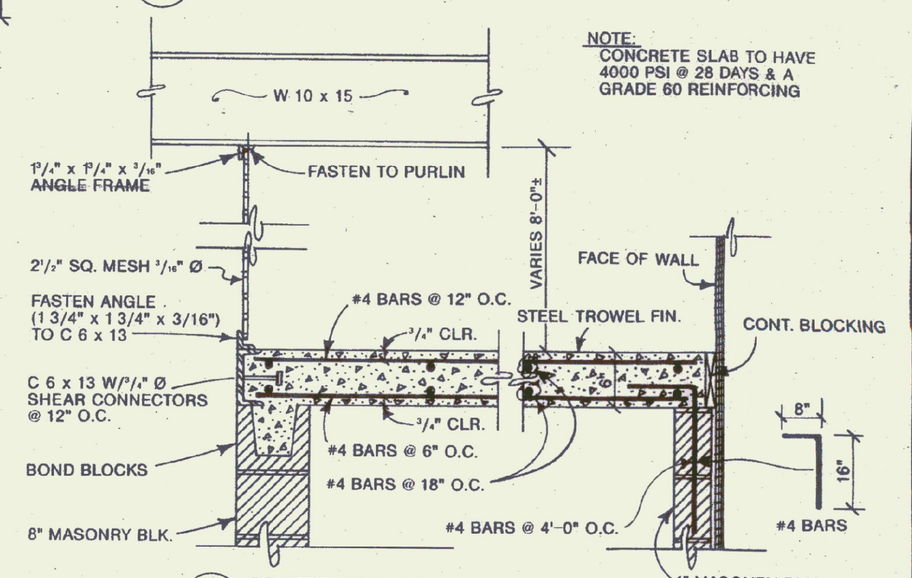

7 S-1 MEZZANINE SLAB DETAIL
SCALE: 1" = 1'-0"

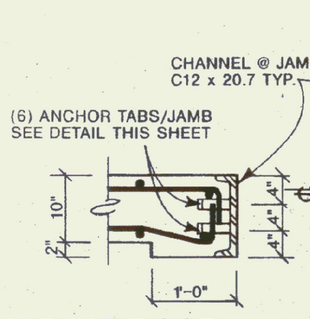

GARAGE DOOR JAMB @ WALL
SCALE: 3/4" = 1'-0"

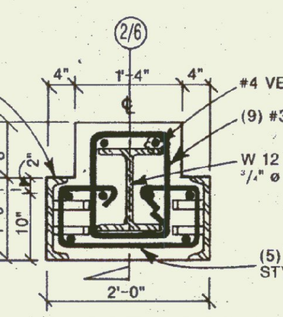

GARAGE DOOR JAMB @ PIER
SCALE: 3/4" = 1'-0"

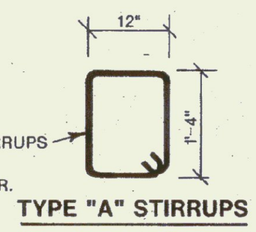

TYPE "A" STIRRUPS

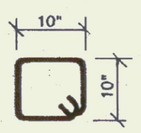

TYPE "C" STIRRUPS AT B-C LINE COLS.

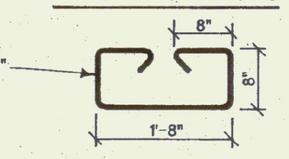

TYPE "B" STIRRUPS
SCALE: 3/4" = 1'-0"

STATE OF VERMONT
DEPARTMENT OF STATE BUILDINGS
AGENCY OF ADMINISTRATION
MONTPELIER, VERMONT

VERMONT AGENCY OF TRANSPORTATION
FOUNDATION PLANS & SECTIONS
5 BAY MAINTENANCE GARAGE
LUDLOW, VERMONT

DATE: Aug. 1998	SCALE: AS NOTED	REVISIONS:	DWG. NO. S-1
DRAWN BY: A. POULIN	APPROVED BY:		22 OF 30