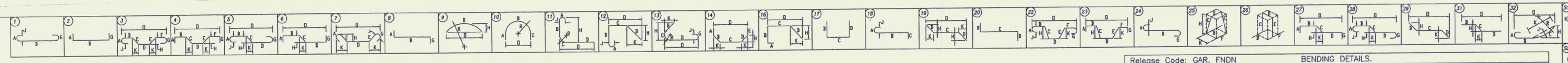

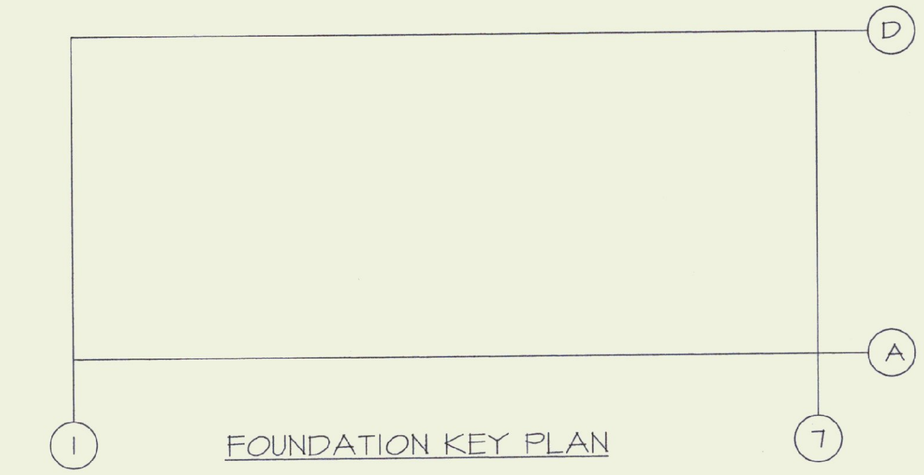

FOUNDATION KEY PLAN

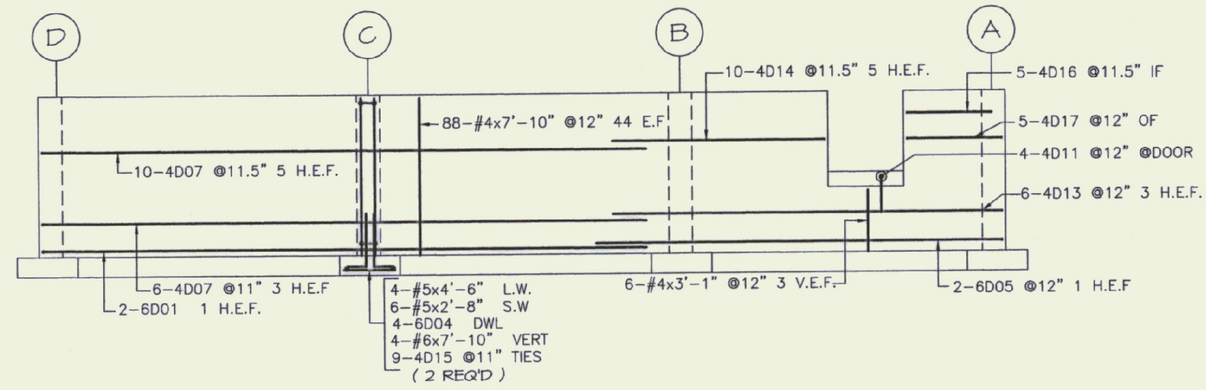

WALL LINE 1

Release Code: GAR. FNDN					BENDING DETAILS.													
Bar Mark	Qty	Size	Total length	Type	'A'	'B'	'C'	'D'	'E'	'F'	'G'	'H'	'J'	'K'	'O'	'R'		
4D01	18	#4	29'4"	18	6"	19'2"	8"						4"					
4D02	5	#4	22'7"	2	6"	21'5"					8"							
4D03	5	#4	28'	18	6"	19'	8"						4"					
4D04	5	#4	11'3"	18	6"	10'1"	8"						4"					
4D05	15	#4	16'8"	1	6"	15'8"					6"		4"					
4D06	5	#4	22'7"	2	8"	21'5"												
4D07	44	#4	30'8"	2	8"	30'												
4D08	12	#4	19'4"	2	8"	18'8"												
4D09	45	#4	5'4"	H02	6"	8"	8"	1'8"	8"	8"	6"		4"		1'8"			
4D10	5	#4	30'6"	2	6"	30'												
4D11	95	#4	3'	17		1'6"	1'6"											
4D12	36	#4	4'3"	T1	4½"	9"	1'	9"	1'		4½"	3"						
4D13	12	#4	28'	2	8"	19'4"												
4D14	10	#4	172½"	2	8"	169½"												
4D15	38	#4	4'7"	T1	4½"	10"	10"	10"	10"		4½"	3"						
4D16	5	#4	5'6½"	20		8"	47½"	8"										
4D17	5	#4	5'10½"	2	6"	49½"					8"							
4D18	5	#4	7'6½"	20		8"	62½"	8"										
4D19	5	#4	7'10½"	2	6"	69½"					8"							
4D20	10	#4	67½"	2	8"	59½"												
4D21	90	#4	5'5"	T1	4½"	1'	1'4"	1'	1'4"		4½"	3"						
4D22	5	#4	13'8"	2	8"	12'4"					8"							
4D23	5	#4	13'2"	20		8"	11'10"	8"										
4D24	5	#4	4'9"	2	6"	4'3"												
4D25	5	#4	5'5"	27	6"	2'5"	8"	1'2"			8"	2"		7½"	4'2½"			
4D26	5	#4	5'4"	20		8"	4'2"	8"										
4D27	5	#4	5'11"	H03	8"	3'9½"	9½"	8"				2"		9"				
4D28	14	#4	2'	2	8"	1'4"												
5D01	5	#5	3'6"	17		1'6"	2"											
6D01	8	#6	31'	2	1'	30'												
6D02	4	#6	22'2"	2	1'	21'2"												
6D03	40	#5	4'10"	2	1'	3'10"												
6D04	37	#6	3'	2	1'	2'												
6D05	4	#6	21'2"	2	1'	20'2"												
6D06	20	#6	5'2"	1	8"	4'6"							6"					

#3

#3

#3

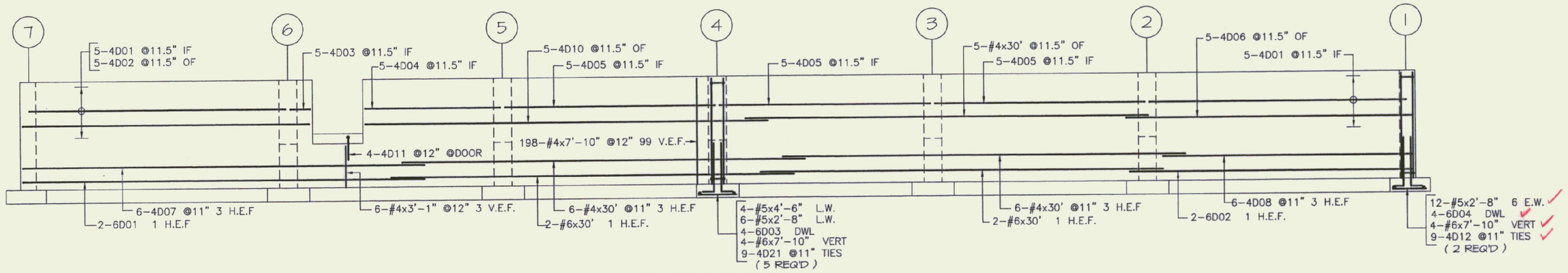

WALL LINE D

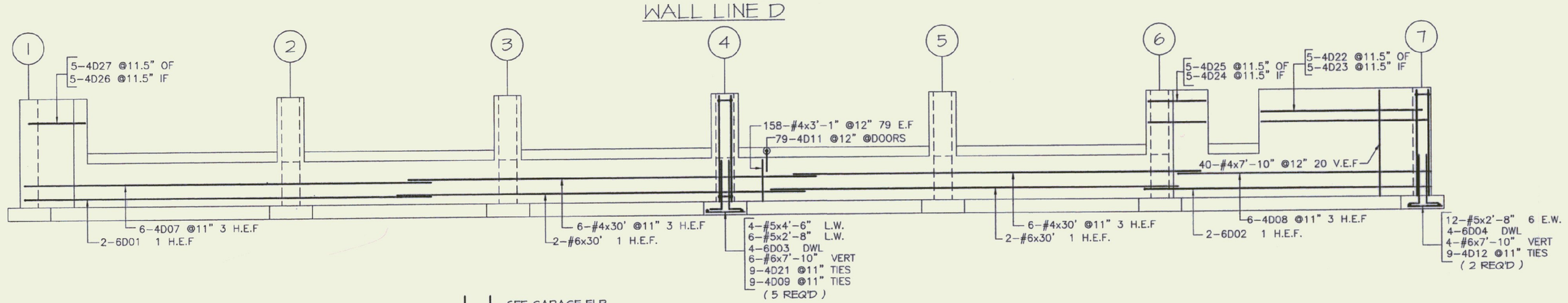

WALL LINE A

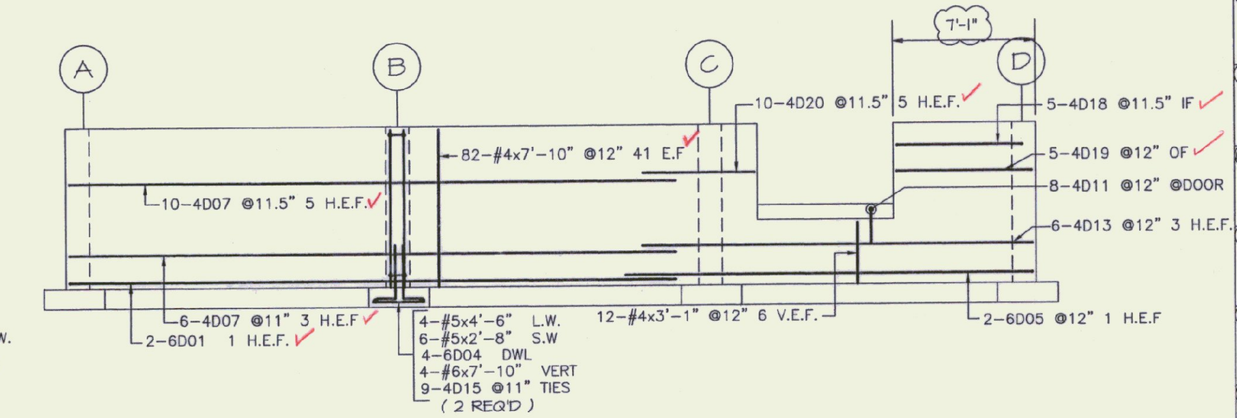

WALL LINE 7

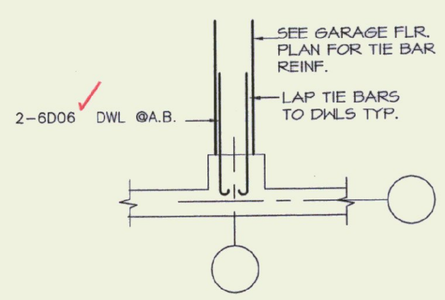

TYP. COL. DETAIL ALNG LINES A & D

(10 REQ'D)

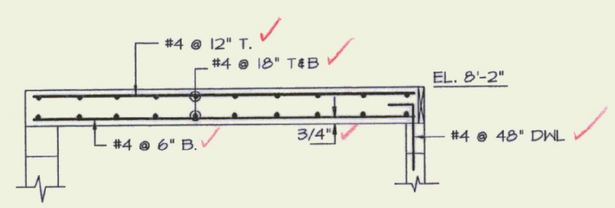

MEZZ. SLAB SECTION

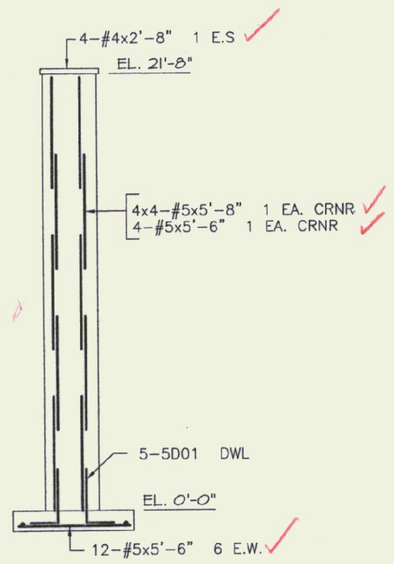

CHIMNEY ELEVATION

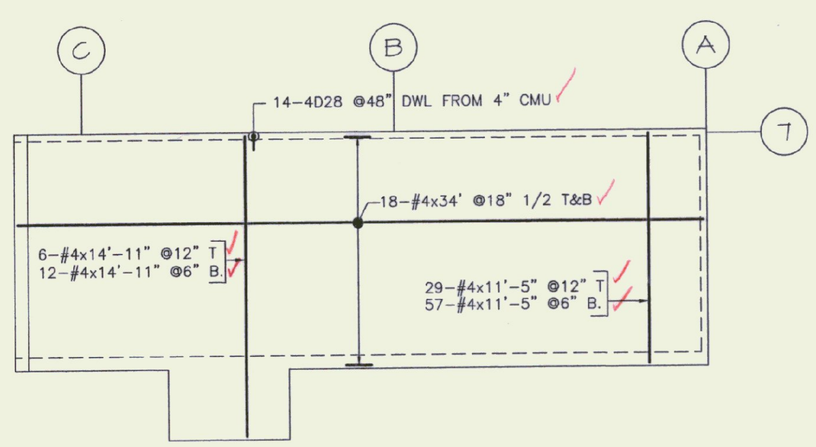

MEZZANINE ELEVATED SLAB REINF PLAN

140 LF OF 3/4" SLAB BOLSTER PLASTIC TIPPED @48" O.C

135 LF OF 2 1/2" SLAB BOLSTER UPPER @48" O.C.

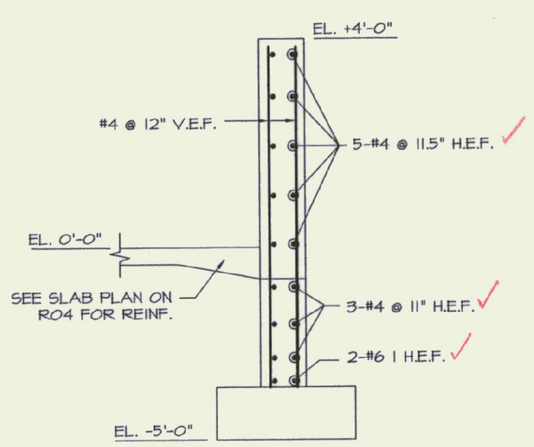

TYP. WALL SECTION

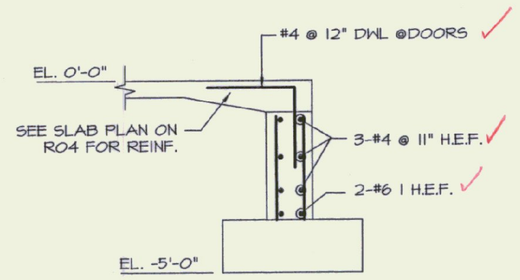

TYP. WALL SECTION @DOORS

REFERENCE DWG.

REINFORCING BARS ASTM A615 GRADE 60 UNLESS NOTED 60

LAP ALL CONTINUOUS BARS

#3 =____ #6 =____ #9 =____

#4 =____ #7 =____ #10=____

#5 =____ #8 =____ #11=____

Legend:

IF	Inside Face	V	Vertical
OF	Outside Face	H	Horizontal
NF	Near Face	EW	Each Way
FF	Far Face	B/Bot	Bottom
EF	Each Face	T	Top
		SB	Support Bars

NOTICE

Shortages, improper fabrication or claims for any other reason must be reported to this company within a period of 15 days of delivery. This company reserves the right to field inspect prior to replacement or reconditioning of nonconforming material, and will not honor charges for work done in the field without specific authorization from this company.

REINFORCING STEEL PLACING DRAWINGS ONLY USE IN CONJUNCTION WITH CONTRACT DRAWINGS & SPECIFICATIONS. ELEVATIONS & DIMENSIONS SHOWN ON THIS DRAWING ARE FOR DETAILING PURPOSES ONLY AND SHOULD NOT BE USED FOR CONSTRUCTION UNLESS VERIFIED BY ENGINEER OR CONTRACTOR.

DATE	REV. NO.	DESCRIPTION	DATE	SENT FOR
			4-21-99	APPROVAL

BARKER STEEL CO., INC.

LEBANON OFFICE

PROJECT	MAINTINANCE GARAGE & SHEDS OFF RTE 100
LOCATION	LUDLOW, VT.
ARCHITECT	
ENGINEER	STATE OF VT-AOT
CUSTOMER	NAYLOR & BREEN BLDRS

Drawn By:	Date:	Reviewed By:	Job No.
12 J.NEAL	4-26-99		05930449

Drawing Covers:	Drawing no.
GARAGE FNDN REINF.	R03