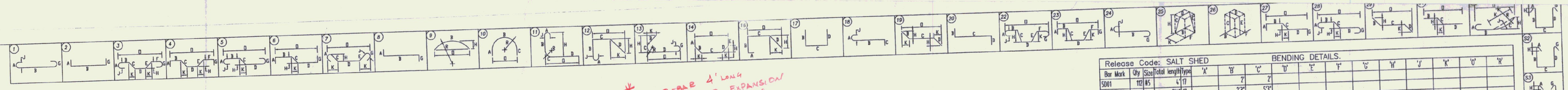

Release Code: SALT SHED — BENDING DETAILS.

Bar Mark	Qty	Size	Total length	Type	'A'	'B'	'C'	'D'	'E'	'F'	'G'	'H'	'J'	'K'	'O'	'R'
5D01	112	#5	4'	17		2'	2'									
6D01	892	#6	74'	17		23'	53'									
6D02	68	#6	6'8"	17		23'	45'									

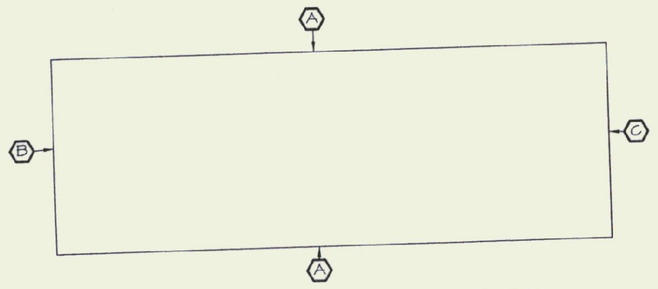

SALT SHED FNDN KEY PLAN

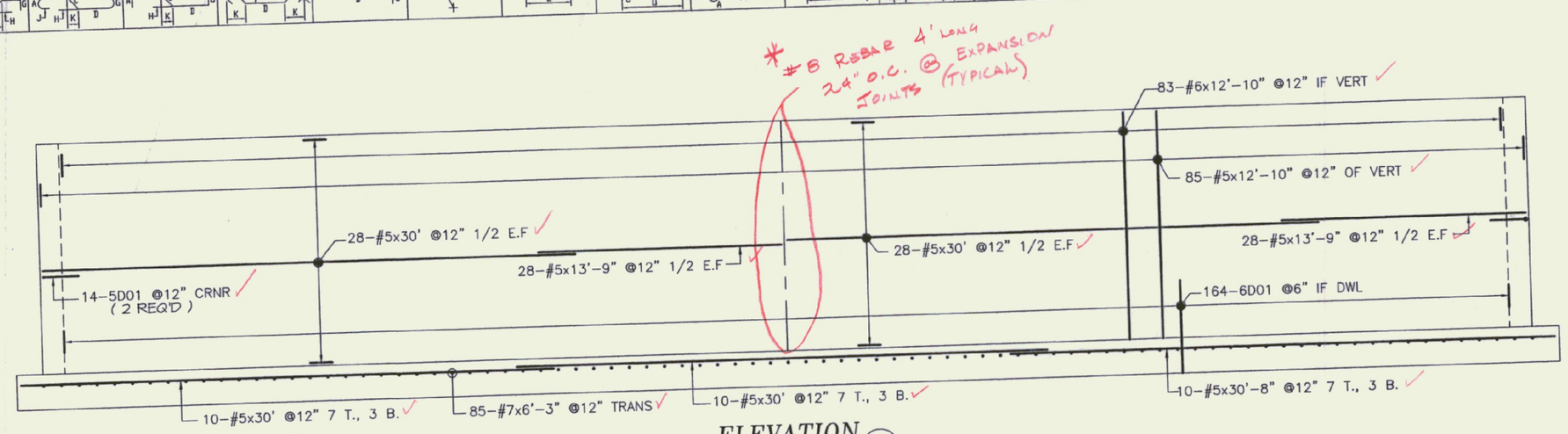

ELEVATION (A) (2 REQ'D)

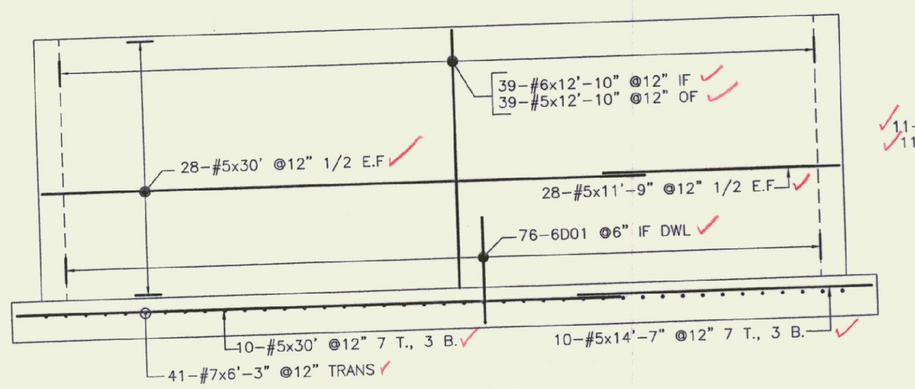

ELEVATION (B)

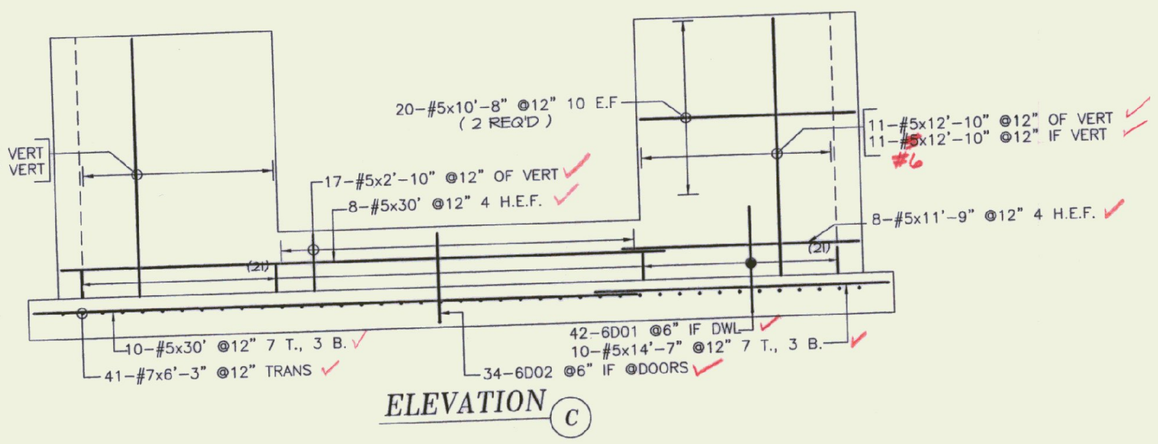

ELEVATION (C)

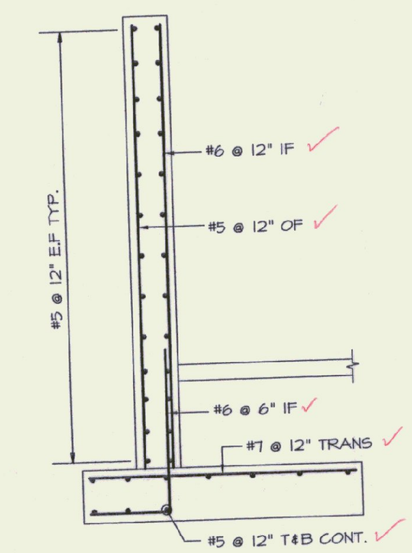

TYP. WALL SECTION

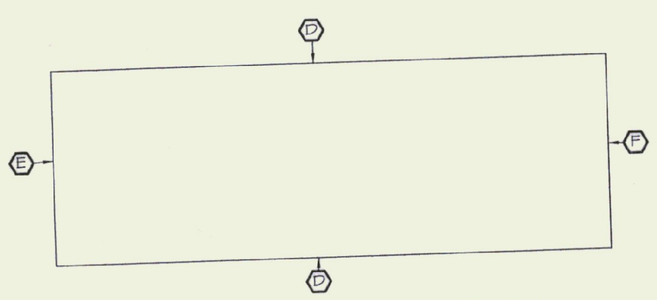

SALT SHED FNDN KEY PLAN

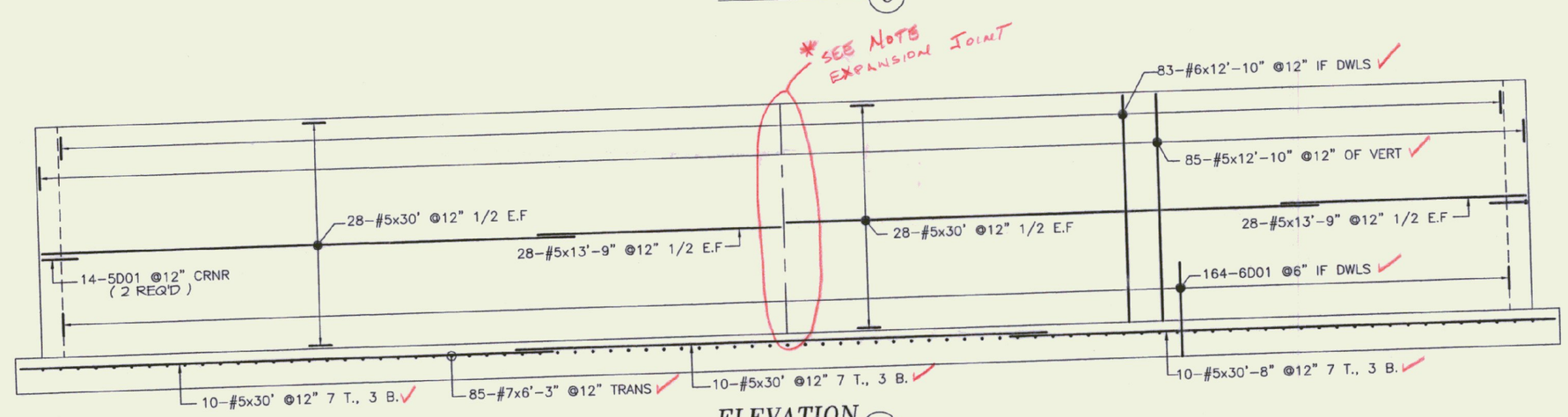

ELEVATION (D) (2 REQ'D)

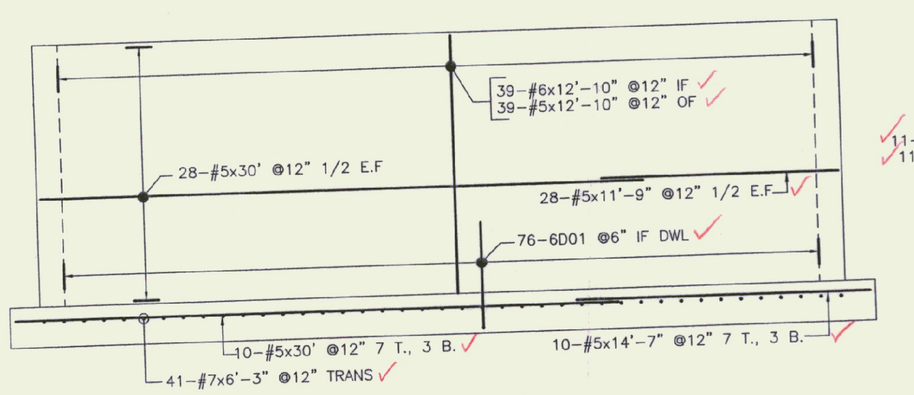

ELEVATION (E)

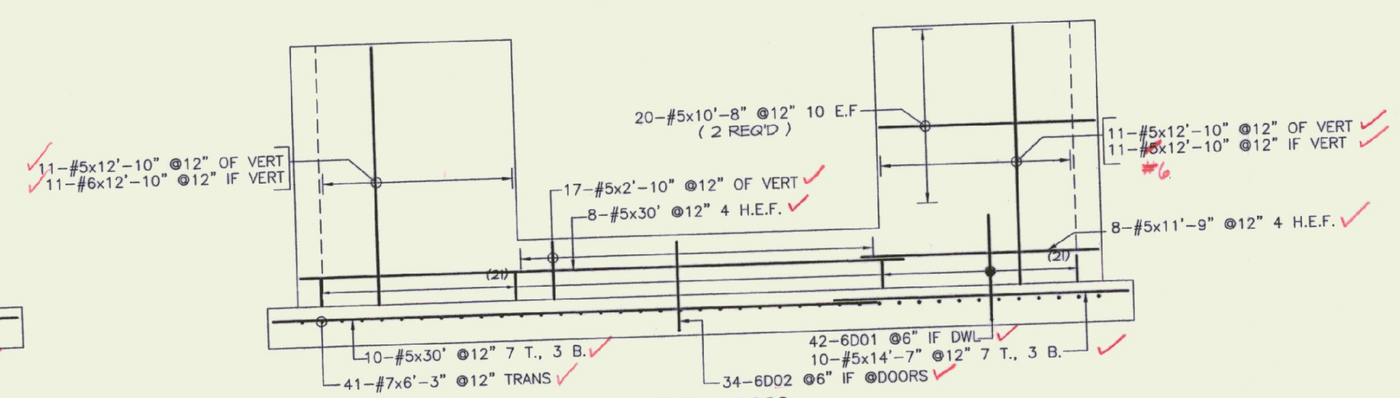

ELEVATION (F)

VERMONT STATE BUILDINGS DIVISION
MONTPELIER, VERMONT
JOB: Ludlow A.O.T. Facility
☐ APPROVED
☒ APPROVED AS CORRECTED
☐ NOT APPROVED
☐ REVISE AND RESUBMIT
Shop drawings approval is general and only for conformance with the design concept of the project. Approval shall not relieve Contractor of responsibility for intent of Contract documents for accuracy, dimensioning, quantity, etc.
BY Wylie D. Miller
DATE May 4, 1999

REFERENCE DWG.

REINFORCING BARS ASTM A615 GRADE 60 UNLESS NOTED 60
LAP ALL CONTINUOUS BARS
#3 =____ #6 =____ #9 =____
#4 =____ #7 =____ #10=____
#5 =____ #8 =____ #11=____

Legend:

IF	Inside Face	V	Vertical
OF	Outside Face	H	Horizontal
NF	Near Face	EW	Each Way
FF	Far Face	B/Bot	Bottom
EF	Each Face	T	Top
		SB	Support Bars

NOTICE

Shortages, improper fabrication or claims for any other reason must be reported to this company within a period of 15 days of delivery. This company reserves the right to field inspect prior to replacement or reconditioning of nonconforming material, and will not honor charges for work done in the field without specific authorization from this company.

REINFORCING STEEL PLACING DRAWINGS ONLY USE IN CONJUNCTION WITH CONTRACT DRAWINGS & SPECIFICATIONS. ELEVATIONS & DIMENSIONS SHOWN ON THIS DRAWING ARE FOR DETAILING PURPOSES ONLY AND SHOULD NOT BE USED FOR CONSTRUCTION UNLESS VERIFIED BY ENGINEER OR CONTRACTOR.

DATE	REV. NO.	DESCRIPTION	DATE	SENT FOR
			4-26-99	APPROVAL

BARKER STEEL CO., INC.

TODD

LEBANON
OFFICE

PROJECT	MAINTINANCE GARAGE & SHEDS
	OFF RTE. 100
LOCATION	LUDLOW, VT.
ARCHITECT	
ENGINEER	STATE OF VT-A01
CUSTOMER	NAYLOR & BREEN BLDRS

Drawn By:	Date:	Reviewed By:	Job No.
12 J.NEAL	4-23-99		05930449

Drawing Covers:	Drawing no.
(2) SALT SHED FNDN REINF.	R01