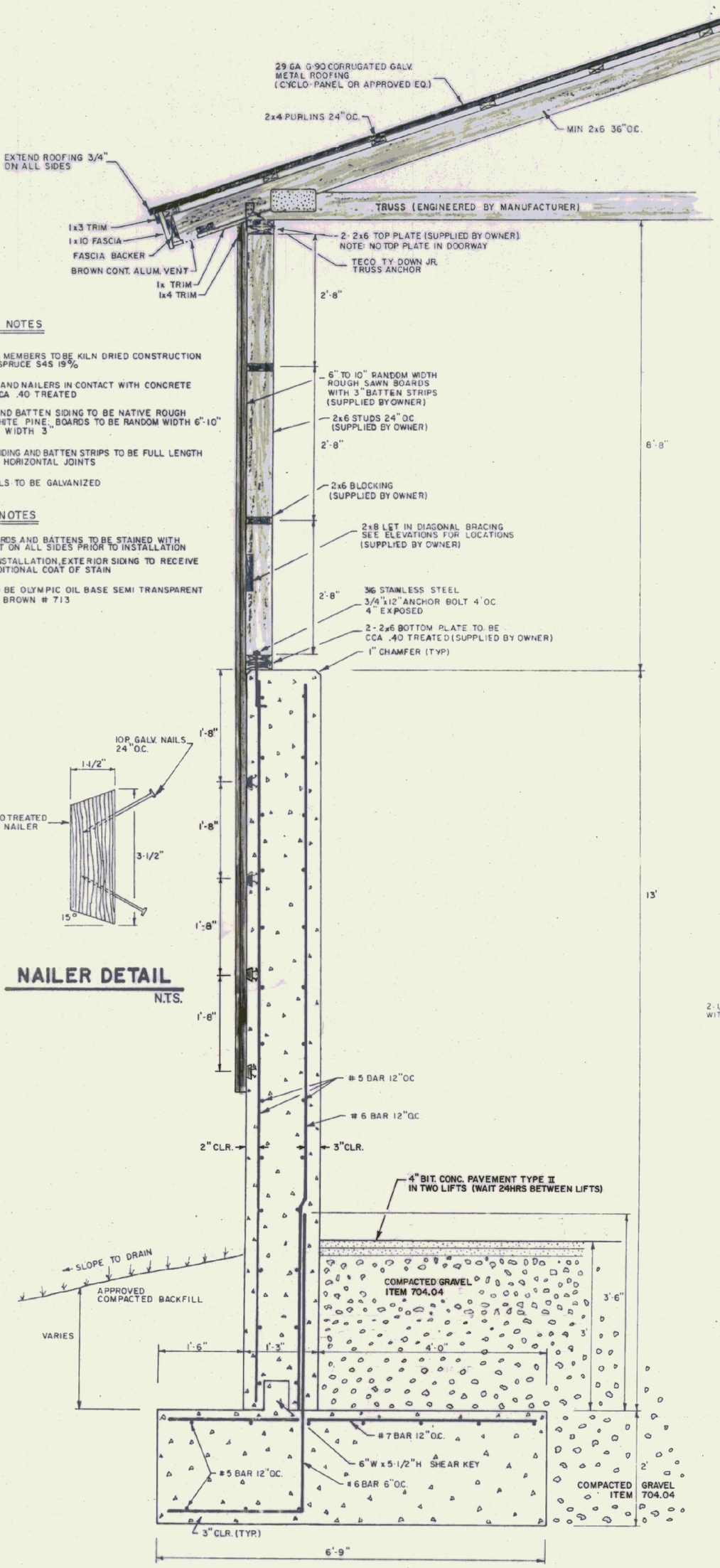

TYPICAL WALL SECTION
N.T.S.

LUMBER NOTES

- FRAMING MEMBERS TO BE KILN DRIED CONSTRUCTION GRADE SPRUCE S4S 19%
- PLATES AND NAILERS IN CONTACT WITH CONCRETE TO BE CCA .40 TREATED
- BOARD AND BATTEN SIDING TO BE NATIVE ROUGH SAWN WHITE PINE, BOARDS TO BE RANDOM WIDTH 6"-10" BATTEN WIDTH 3"
- BOARD SIDING AND BATTEN STRIPS TO BE FULL LENGTH WITH NO HORIZONTAL JOINTS
- ALL NAILS TO BE GALVANIZED

FINISH NOTES

- ALL BOARDS AND BATTENS TO BE STAINED WITH ONE COAT ON ALL SIDES PRIOR TO INSTALLATION
- AFTER INSTALLATION, EXTERIOR SIDING TO RECEIVE ONE ADDITIONAL COAT OF STAIN
- STAIN TO BE OLYMPIC OIL BASE SEMI TRANSPARENT OXFORD BROWN # 713

TRUSS NOTES

- TRUSS MANUFACTURER TO PROVIDE THE DEPT. OF STATE BUILDINGS ENGINEER A SET OF ENGINEERED & STAMPED DRAWINGS FOR APPROVAL PRIOR TO TRUSS MANUFACTURER
- TRUSS MANUFACTURER TO PROVIDE THE CONTRACTOR WITH ALL NECESSARY INSTRUCTIONS FOR PROPER TRUSS INSTALLATION, ANCHORAGE, BRACING, LIFTING ETC.
- TRUSS DESIGN LOADS IN ACCORDANCE WITH THE 1987 BOCA FOR VERMONT
  MINIMUM LOADS:
  LIVE – PER 1987 B.O.C.A. FOR VT. (50 PSF MIN.)
  DEAD – AS CALCULATED FROM TRUSS & ROOF MATERIALS
  5.6 SF ON BOTTOM CHORD
  WIND – 25 P.S.F
  DIAGONAL WIND BRACING PER TRUSS MANUFACTURER

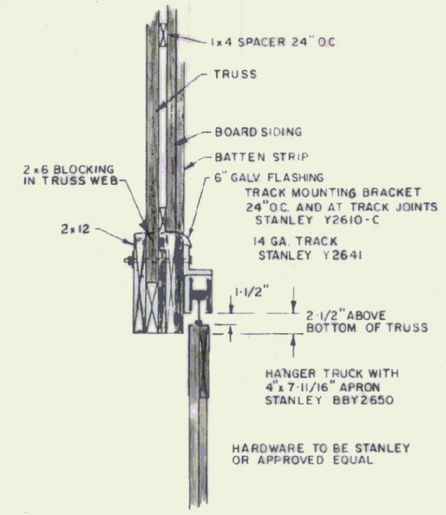

TRACK MOUNT DETAIL
N.T.S.

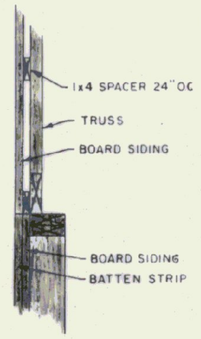

SECTION AA
N.T.S.

BACK ELEVATION
N.T.S.

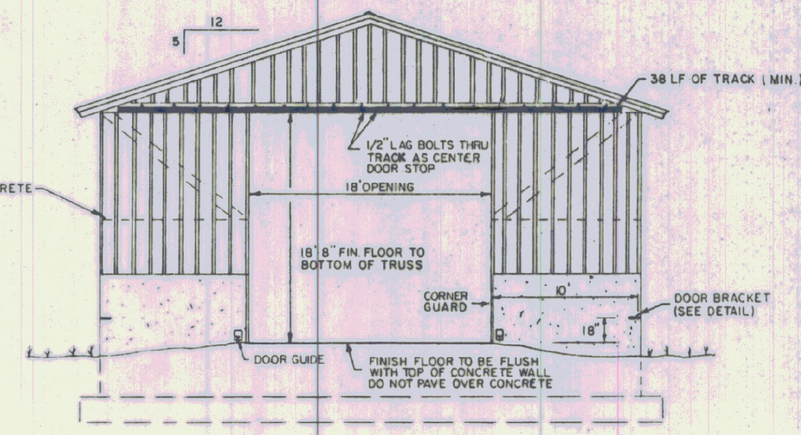

FRONT ELEVATION
N.T.S.

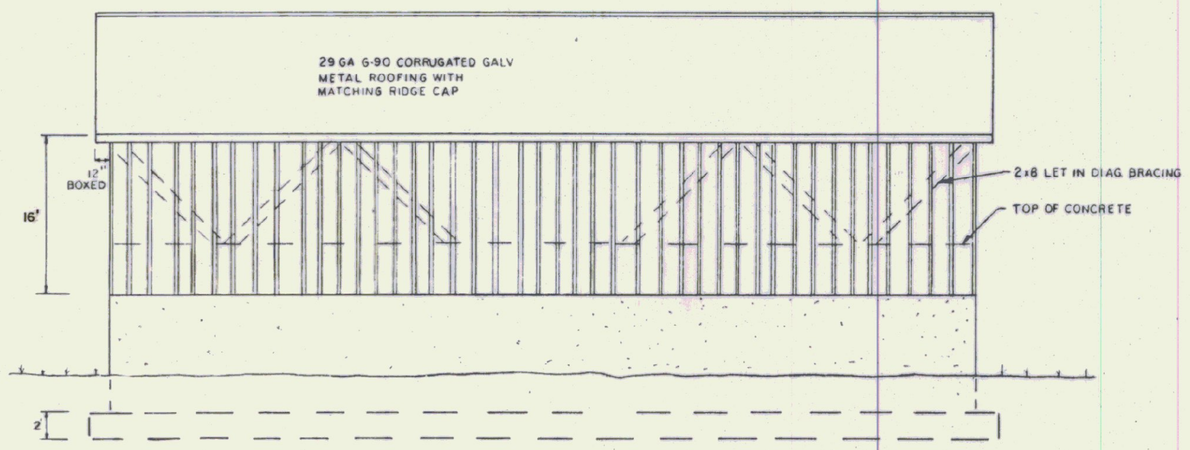

SIDE ELEVATION
N.T.S.

NAILER DETAIL
N.T.S.

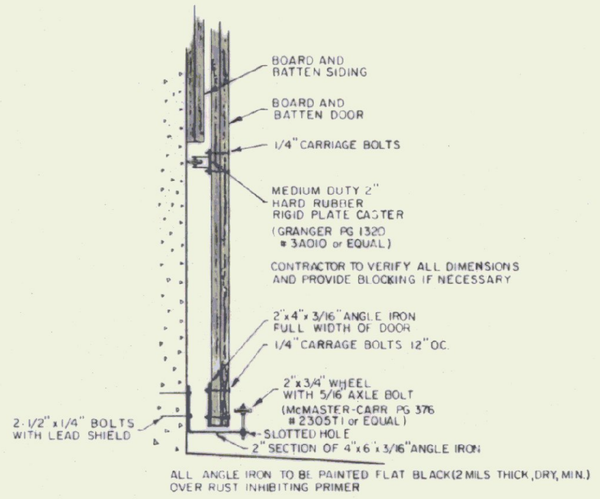

DOOR GUIDE DETAIL
N.T.S.

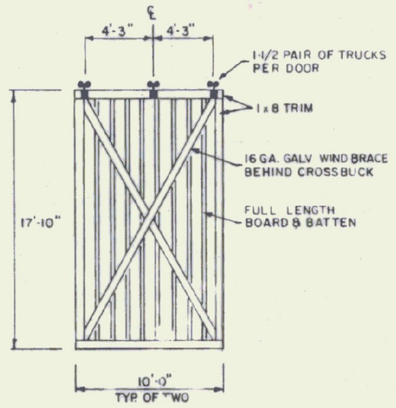

DOOR DETAIL
N.T.S.

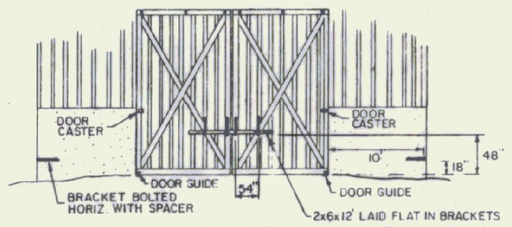

DOOR BRACKET LOCATIONS
N.T.S.

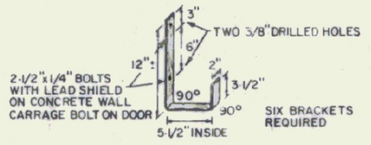

1/4"x2"x22": COLD ROLLED STEEL, BENT TO SHAPE
PAINTED FLAT BLACK (2 MILS THICK, DRY, MIN.) OVER RUST INHIBITING PRIMER

DOOR BRACKET DETAIL
N.T.S.

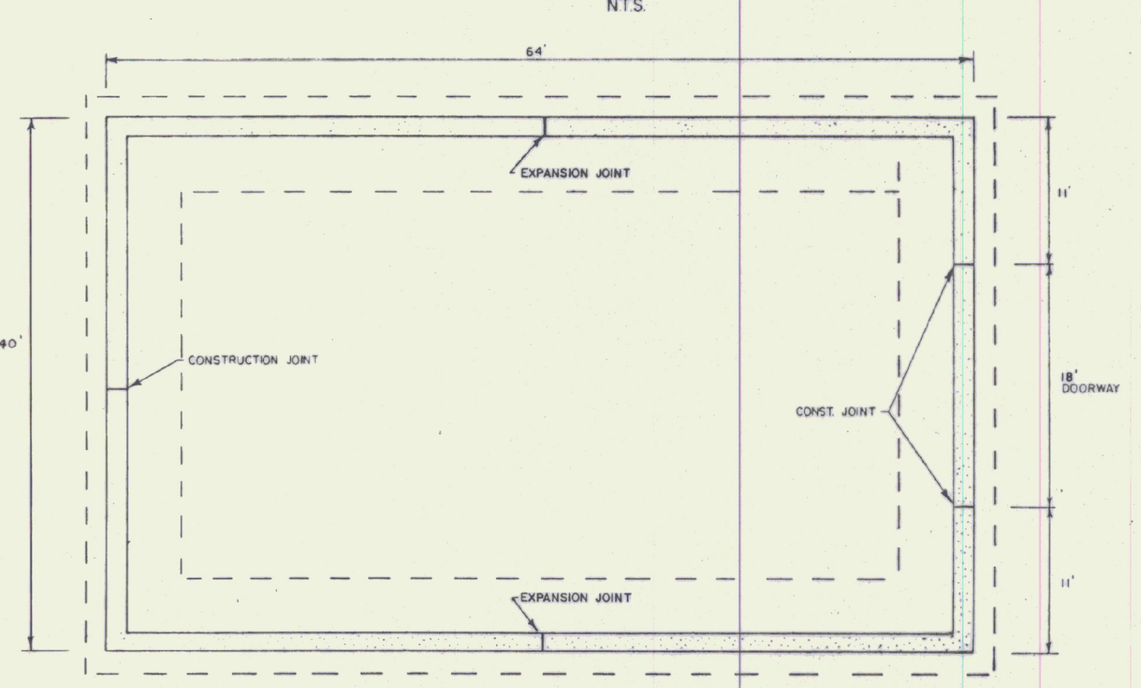

FOUNDATION PLAN
1/8" = 1'-0"

CONCRETE NOTES

- ALL CONCRETE TO BE 3500 PSI AT 28 DAYS WITH MAXIMUM SLUMP OF 4"
- EXPOSED WALLS TO BE DRESS FINISHED.
- 1/2" V JOINTS IN EXPOSED FACE OF CONST JOINTS.
- 3/4" CHAMFER IN OUTER FACE OF EXPANSION JOINTS
- L IRON CAST INTO WALL CORNERS AT DOOR OPENINGS
- RE BAR TO BE CONTINUOUS THROUGH CONST. JOINTS.
- NO HORIZONTAL CONST. JOINTS IN WALLS, CONTINUOUS POUR.
- NO CONST. OR EXP. JOINTS REQUIRED IN FOOTINGS
- ALL RE BAR TO BE GRADE 60.
- CONTRACTOR TO LEAVE NO METAL WITHIN 1" OF SURFACE USE 1" DEEP PLASTIC CONES AT ALL TIES AND PLUG ALL TIE HOLES WITH AN APPROVED NON-SHRINK GROUT.
- RE BAR TO BE STORED ON BLOCKING 4" MIN. ABOVE GROUND
- CONCRETE SUPPLIER TO PROVIDE TEST CYLINDERS FOR TESTING BY OWNER
- CONCRETE SUPPLIER TO CONDUCT ON SITE AIR TESTS

NOTE:

ALL 2x6 AND 2x8 FRAMING LUMBER AND BOARD AND BATTEN SIDING WILL BE ROUGH SAWN AND SUPPLIED BY OWNER. (STATE OF VERMONT)

CONTRACTOR TO SUPPLY ALL OTHER MATERIAL INCLUDING BOARD AND BATTEN FOR DOORS.

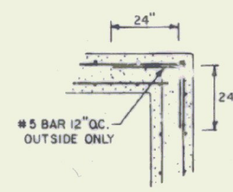

CORNER DETAIL
N.T.S.

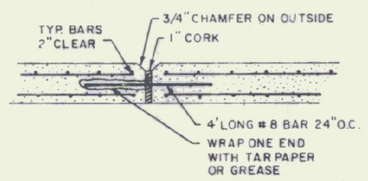

EXPANSION JOINT DETAIL
N.T.S.

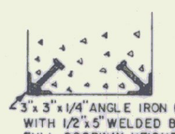

3"x3"x1/4" ANGLE IRON (A-36 STEEL) WITH 1/2"x1.5" WELDED BOLTS 18" O.C.
FULL DOORWAY HEIGHT
PAINTED FLAT BLACK (2 MILS THICK, DRY, MIN.) OVER RUST INHIBITING PRIMER

CORNER GUARD
N.T.S.

STATE OF VERMONT
DEPARTMENT OF STATE BUILDINGS
AGENCY OF ADMINISTRATION
MONTPELIER VERMONT

40' x 64'
SALT / SAND SHED
ROCKINGHAM MAINTENANCE FACILITY
ROCKINGHAM VERMONT

DATE: JUNE 1992	SCALE: AS NOTED	REVISIONS	DWG. NO. A-1
DRAWN BY:	APPROVED BY:		2 OF 2