GENERAL NOTES:
ALL MATERIALS TO BE FURNISHED BY THE CONTRACTOR.

ALL EXPOSED METAL, EXCEPT GALVANIZED, (CORNER ANGLES, DOOR GUIDES, BRACKETS, ETC.) SHALL BE PAINTED FLAT BLACK (2 MILS THICK, DRY, MIN.) OVER RUST INHIBITING PRIMER.

ALL ELECTRICAL WORK SHALL COMPLY WITH N.E.C.

ALL FRAMING AND BOARD AND BATTEN SIDING MATERIALS SHALL BE FASTENED USING APPROXIMATELY SIZED GALVANIZED FASTENERS AND ACCORDING TO INDUSTRY STANDARDS.

ALL FOOTING WORK, BACKFILL MATERIAL, FLOOR MATERIAL, ETC. TO BE SUBSIDIARY TO THE LUMP SUM ITEM PER AOT SPECIFICATIONS.

ROOFING COLOR: IVY GREEN BY AMERI-DRAIN.

TRUSS NOTES:
TRUSS MANUFACTURER TO SUBMIT TO THE RESIDENT ENGINEER A FULL SET OF ENGINEERED AND STAMPED DRAWINGS FOR APPROVAL PRIOR TO TRUSS MANUFACTURE.

TRUSS MANUFACTURER TO PROVIDE THE CONTRACTOR WITH ALL THE NECESSARY INSTRUCTIONS FOR PROPER TRUSS INSTALLATION, ANCHORAGE, BRACING, LIFTING, ETC.

TRUSS DESIGN IN ACCORDANCE WITH THE 1998 B.O.C.A. FOR VERMONT MINIMUM LOADS.

LIVE-30 PSF ON GROUND SNOW LOAD PER 1998 B.O.C.A. FOR VERMONT.

DEAD-AS CALCULATED FROM TRUSS AND ROOF MATERIALS AND IN ADDITION 5 PSF ON BOTTOM CHORD.

WIND-25 PSF

DIAGONAL BRACING PER TRUSS MANUFACTURER AND MINIMUM TRUSS BRACING DETAILS IN SPECIFICATIONS.

LUMBER NOTES:
FRAMING MEMBERS TO BE KILN DRIED CONST. GRADE SPRUCE S-P-F MAX. 19% MOISTURE CONTENT.

PLATES AND NAILERS IN CONTACT WITH CONCRETE TO BE CCA C-AO PRESSURE TREATED.

BOARD AND BATTEN SIDING TO BE NATIVE ROUGH SAWN EASTERN PIN, SPRUCE, WHITE PINE OR RED PINE. BOARDS TO BE RANDOM WIDTH 8"-12". BATTEN WIDTH 3".

BOARD SIDING AND STRIPS TO BE FULL LENGTH (NO HORIZONTAL JOINTS). SIDING TO BE KILN DRIED TO MAX. 19% MOISTURE CONTENT BEFORE STAIN IS APPLIED.

ALL FASTENERS TO BE GALVANIZED.

FINISH NOTES:
ROOFING COLOR: AMERI-DRAIN IVY GREEN

ALL BOARDS AND BATTEN TO BE STAINED WITH ONE COAT ON ALL SURFACES PRIOR TO INSTALLATION.

AFTER INSTALLATION, EXTERIOR SIDING TO RECEIVE ONE ADDITIONAL COAT OF STAIN. STAIN TO BE SHERWIN WILLIAMS #1055 FOLIAGE OR EQUAL. FIRST COAT WILL BE SEMI-TRANSPARENT AND THE SECOND COAT WILL BE HIGH PIGMENT STAIN.

CONCRETE NOTES:
2"-4" SLUMP.

1/2" "V" JOINTS IN EXPOSED FACE OF CONSTRUCTION JOINTS.

CONCRETE TO BE CLASS "B" PER A.O.T. STANDARD SPECIFICATION TABLE 501.05A W/ 5% +/- 1% AIR ENTRAINMENT.

GALVANIZED L IRON CAST INTO WALL CORNERS AT DOOR OPENINGS.

RE-BAR TO BE CONTINUOUS THROUGH CONSTRUCTION JOINTS.

NO HORIZONTAL CONSTRUCTION JOINTS IN WALLS-CONTINUOUS POUR.

NO CONSTRUCTION OR EXPANSION JOINTS REQUIRED IN FOOTINGS.

CONTRACTOR TO LEAVE NO METAL WITHIN 1" OF SURFACE. USE 1" DEEP PLASTIC CONES AT ALL TIES AND PLUG ALL TIE HOLES WITH AN APPROVED NON-SHRINK GROUT.

ALL RE-BAR TO BE GRADE 60 W/ 5" CLEARANCE ON ALL SIDES UNLESS NOTED OTHERWISE.

RE-BAR TO BE STORED ON BLOCKING 4" MINIMUM ABOVE GROUND.

CONCRETE SUPPLIER TO PROVIDE TEST CYLINDERS FOR CONCRETE TESTING.

ALL CONCRETE TESTING TO BE DONE BY OWNER. CONTRACTOR IS RESPONSIBLE FOR SCHEDULING.

EXPOSED WALLS TO HAVE FORM JOINT REMOVED, TIE HOLES AND CAVITIES DRESS FINISHED PER A.O.T. STANDARD SECTION 501.18.

WALL FORMS SHALL BE LEFT IN PLACE FOR 72 HOURS MINIMUM. FOOTING FORMS SHALL REMAIN IN PLACE FOR 24 HOURS MINIMUM. CONCRETE CURING SHALL FOLLOW IMMEDIATELY AFTER FORM REMOVAL PER A.O.T. STANDARD 501.17. WATER CURING WILL BE REQUIRED, UNLESS ALTERNATE MEANS OF CURING IS APPROVED, IN WRITING, BY THE PROJECT ENGINEER.

REFER TO SHEET S51 FOR DETAILS

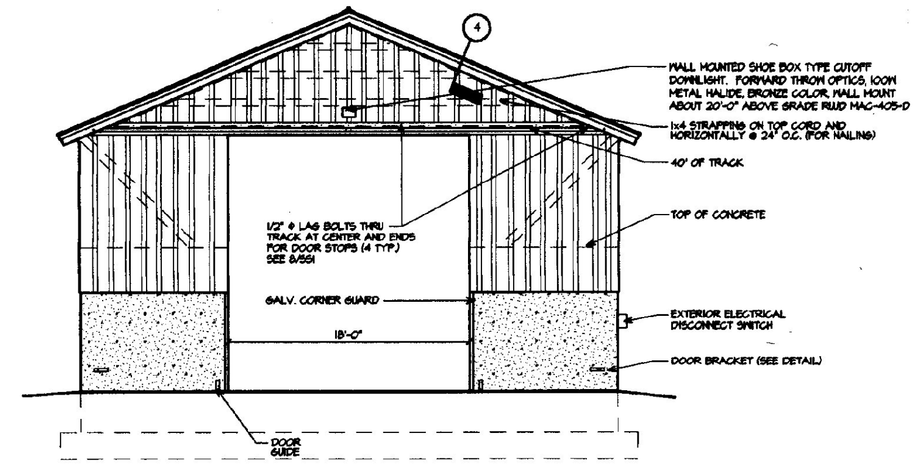

FRONT ELEVATION
1/8" = 1'-0"

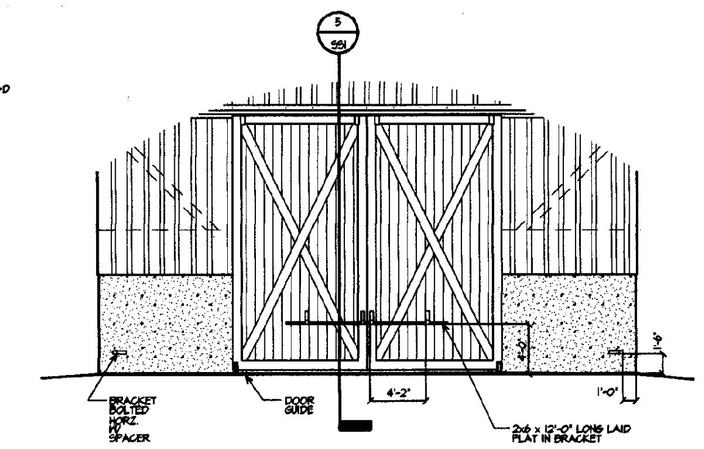

DOOR BRACKET LOCATION
1/8" = 1'-0"

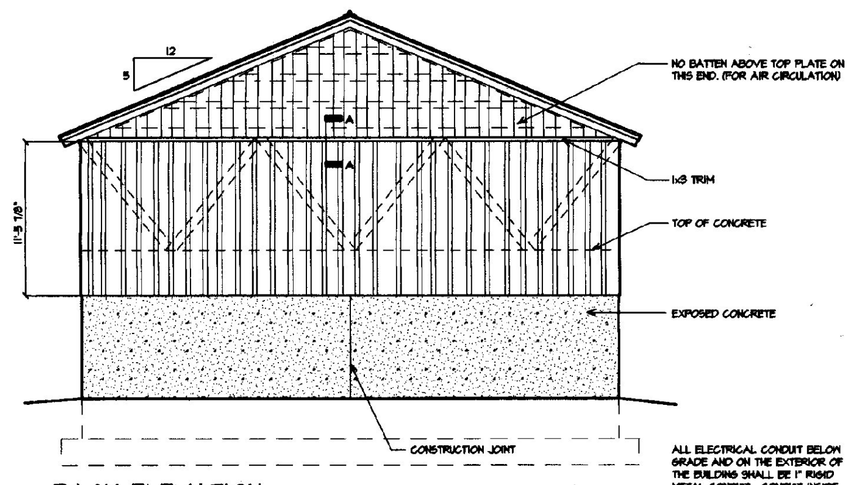

BACK ELEVATION
1/8" = 1'-0"

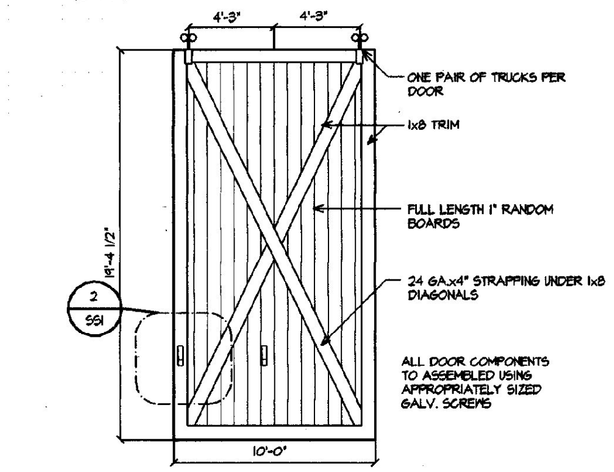

EXTERIOR DOOR DETAIL
3/16" = 1'-0"

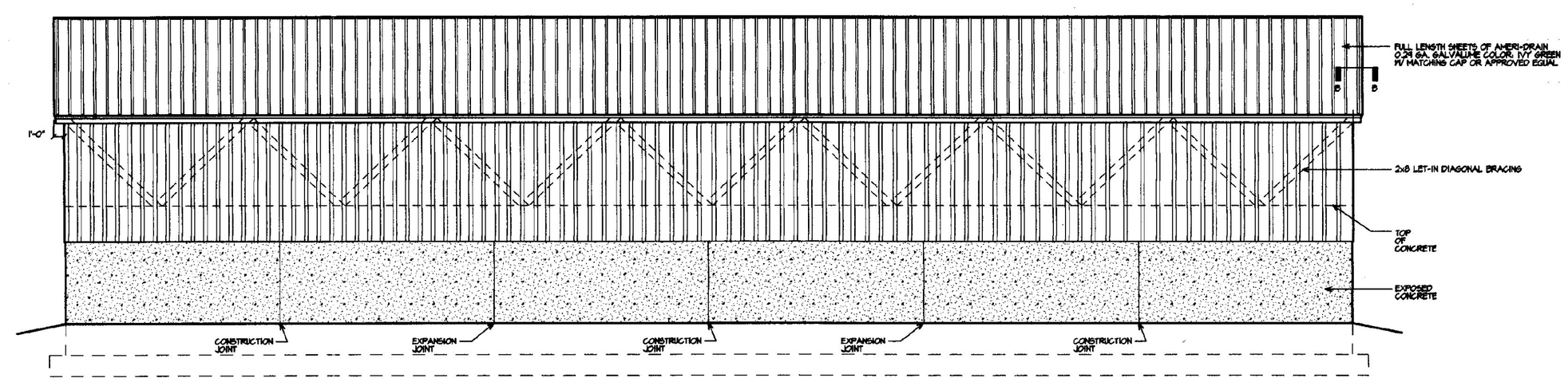

SIDE ELEVATION
1/8" = 1'-0"

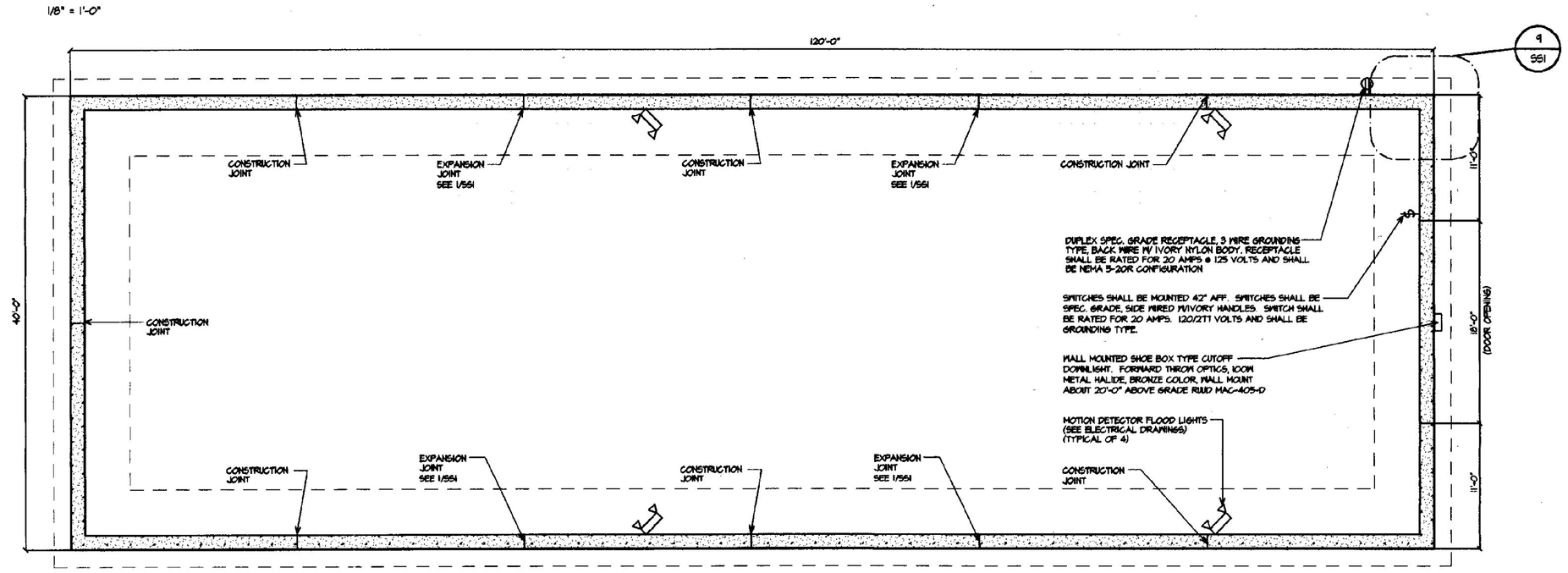

FOUNDATION PLAN
1/8" = 1'-0"

STATE OF VERMONT
Department of Buildings and General Services
Agency of Administration
Montpelier, Vermont

AGENCY of TRANSPORTATION
FIVE BAY MAINTENANCE FACILITY
40' x 120' SALT SHED
LONDONDERRY, VERMONT

REVISIONS	
12/29/97	GDN
07/08/98	GDN
02/10/99	BTM
10/22/99	ADW
05/14/01	KRG

SCALE: AS NOTED
DATE: January 1996
DRAWN BY: Brad McAvoy
APPR. BY: Roger Barry

A.O.T.
40' x 120'
SALT SHED
LONDONDERRY

S52

3 OF 3