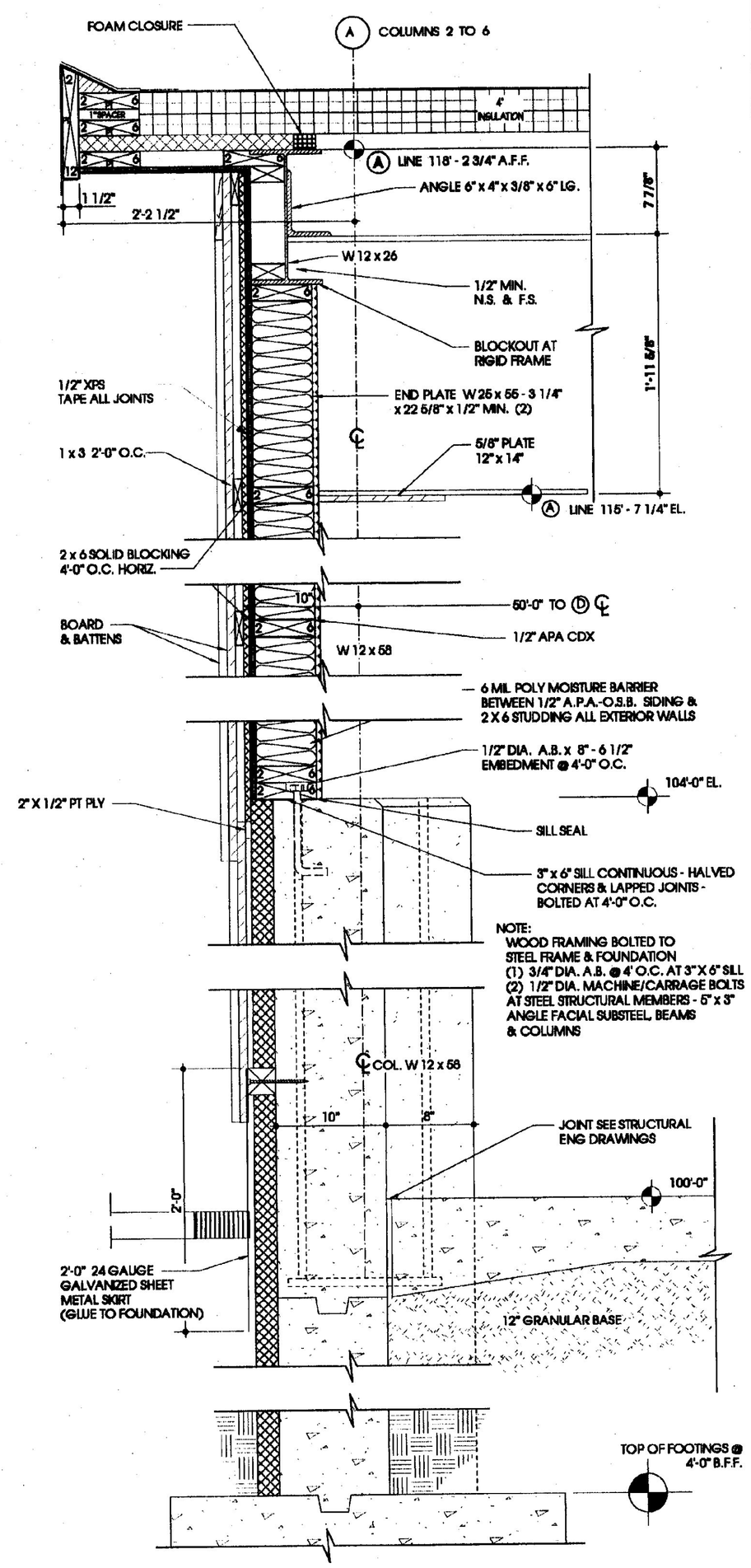

1 WALL SECTION @ COL. LINE "A" PIERS 1 1/2"=1'-0" A4.4

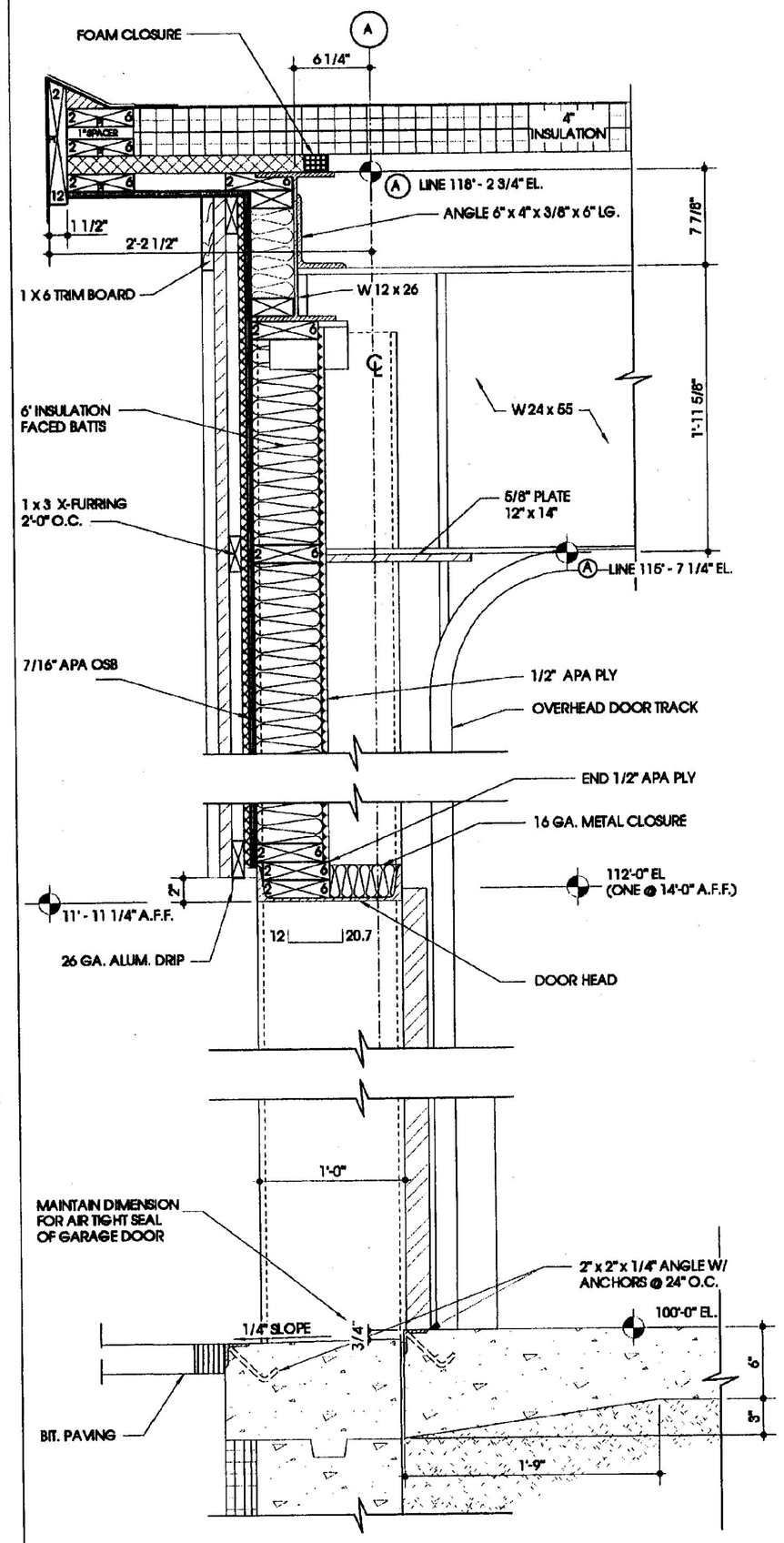

2 OVERHEAD DOOR SECTION 1 1/2"=1'-0" A4.4

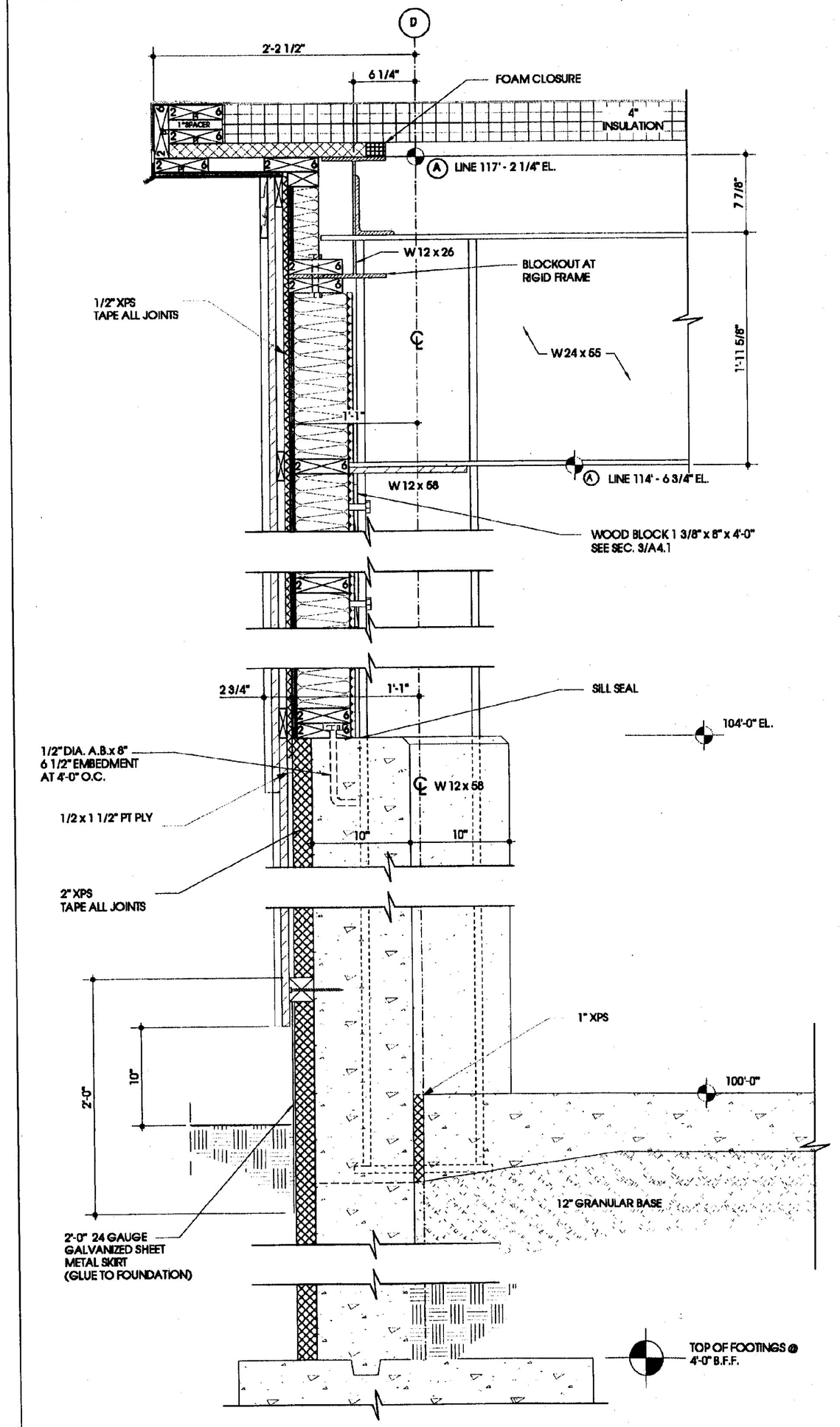

3 WALL SECTION @ COLUMN LINE "D" 1 1/2"=1'-0" A4.4

The Design Studio of
LineSync Architecture
14 Castle Hill Wilmington Vermont 05363 9745 USA
v.802.464.2626 / fx.2426 www.LineSync.com

CLIENT

STATE HIGHWAY GARAGE GENERAL NOTES

1. PROJECT TO CONFORM TO BOCA 1996 WITH THE NFPA LIFE SAFETY 1997. OTHER CODES SUCH AS THE NATIONAL ELECTRIC CODE AND THOSE REQUIRED BY LOCAL AND STATE AUTHORITIES HAVING JURISDICTION SHALL APPLY TO THE SPECIFIC TRADES INVOLVED BY THIS WORK. BOCA USE GROUP: B BUSINESS (SIMILAR TO FIRE STATION).

2. THE CONTRACTOR SHALL VERIFY CONDITIONS AND DIMENSIONS IN FIELD PRIOR TO ERECTION.

3. ALL FRAMING IN CONTACT WITH CONCRETE AND MASONRY TO BE PRESSURE TREATED WOOD.

4. COORDINATE ALL DRAWINGS W/ PROJECT MANUAL.

5. ARCHITECTURAL ELEVATION BULLETS REFERENCE A 100'-0" DATUM AT THE TOP OF THE OFFICE SLAB. THIS IS EQUIVALENT TO THE SITE ENGINEER'S ELEVATION OF 540'-0'. REF C-1.

PROJECT DRAWING LIST

CIVIL BY DUPRESNE-HENRY
C1 SITE PLAN
C2 LAYOUT PLAN
C3 ROAD PROFILE
C4,5,6,7 ROAD CROSS SECTIONS
C8,9 SITE DETAILS
C10,11, SEPTIC SYSTEM DETAILS

GARAGE & OFFICES BY LINESYNC ARCHITECTURE
A1.1 SITE PLAN, LOCATION MAP & REFRENCES
A2.1 ELEVATIONS
A2.2 ELEVATIONS
A3.1 1ST FL. PLAN
A3.2 MEZZANINE/ROOF PLAN, WINDOW/DR. SCHED
A4.1 SECTIONS/DETAILS
A4.2 INTERIOR ELEVATIONS
A4.3 INTERIOR ELEVATIONS & SECTIONS
A4.4 WALL SECTIONS
A4.5 WALL SECTIONS & DETAILS
A4.6 DETAILS
A4.7 WINDOW & STAIR DETAILS

GARAGE STRUCTURAL BY HALAM ASSOCIATES
S0.1 GEN STRUCT NOTES & STANDARD DETAILS
S1.1 FOUNDATION PLAN
S1.2 ROOF FRAMING PLAN
S2.1,2 STRUCTURAL SECTIONS & DETAILS
S3.1 STANDARD STRUCTURAL DETAILS

ELECTRICAL BY DUPRESNE-HENRY
ES1 ELECTRICAL SITE PLAN
E1 FIRST FLOOR PLAN (INCLUDES MEZ.)

GARAGE MECH.SHED BLDGS BY DEPT OF STATE BLDGS
M1 GARAGE MECHANICAL PLAN
M2 GARAGE MECH.SECT/ELEGEND/DETS/SCHEDS
SS-1 A.O.T. 24x48 STORAGE BLDG W/STRUCT.
SS-1 A.O.T. 40x80 SALT / SAND SHEDS W/STRUCT
P-1 PIPING PLANS & DETAILS
V-1 VENTILATION SYSTEM PLANS & DETAILS

No.	DATE	DRAWING RELEASE
1	20 NOV '01	ISSUED FOR STATE REVIEW
2	07 FEB '02	ISSUED FOR BID

ATSF
AGENCY OF TRANSPORTATION STORAGE FACILITY PROJECT

READSBORO, VERMONT

WALL SECTIONS

SHEET TITLE

BAR = ONE INCH

MTW
SD
DRAWN BY
QC

0113
PROJECT NUMBER

17 JUNE 2001
DRAWING DATE

A4.4
SHEET DESIGNATION