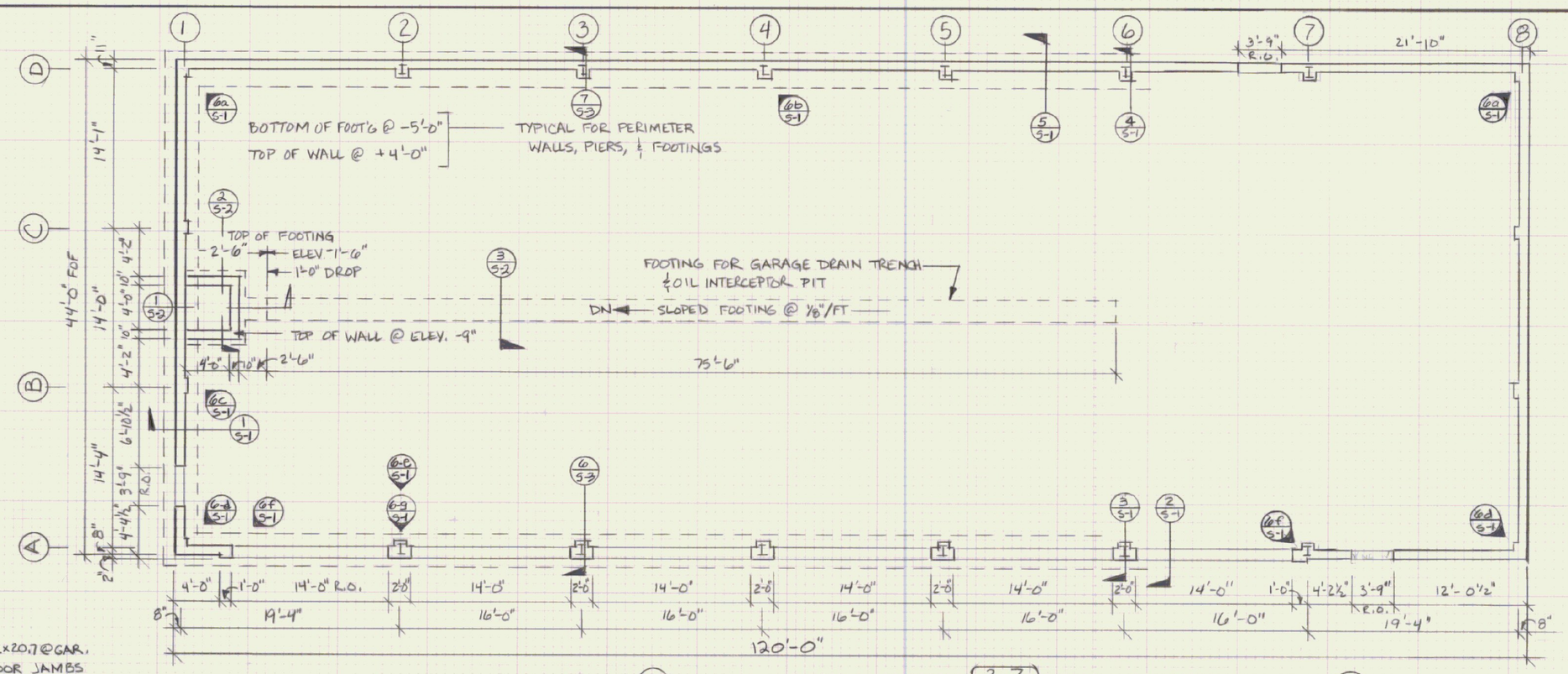

FOOTING & FOUNDATION PLAN
SCALE 1/8" = 1'-0"

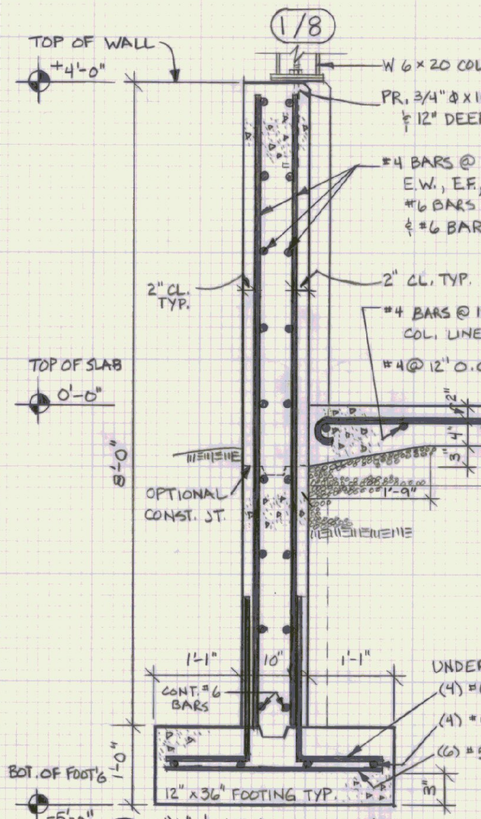

1 S-1 "1" & "8" LINE WALLS
SCALE 3/4" = 1'-0"

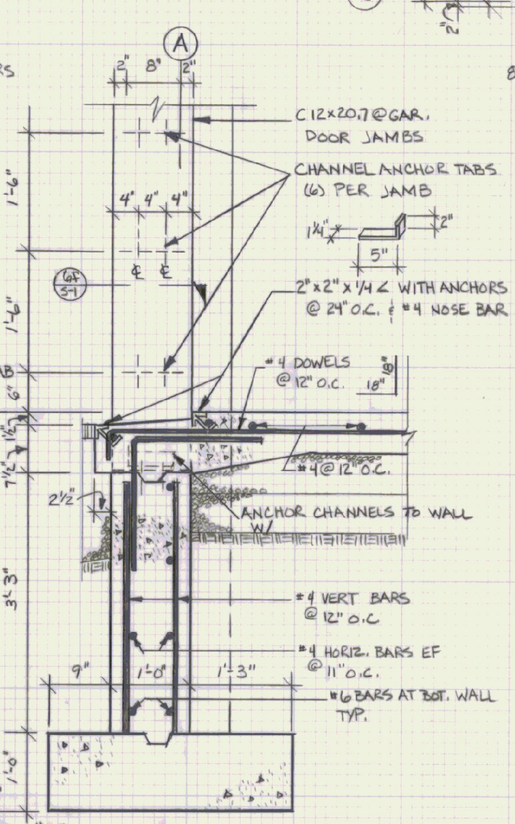

2 S-1 "A" LINE WALLS @ GARAGE DOORS
SCALE 3/4" = 1'-0"

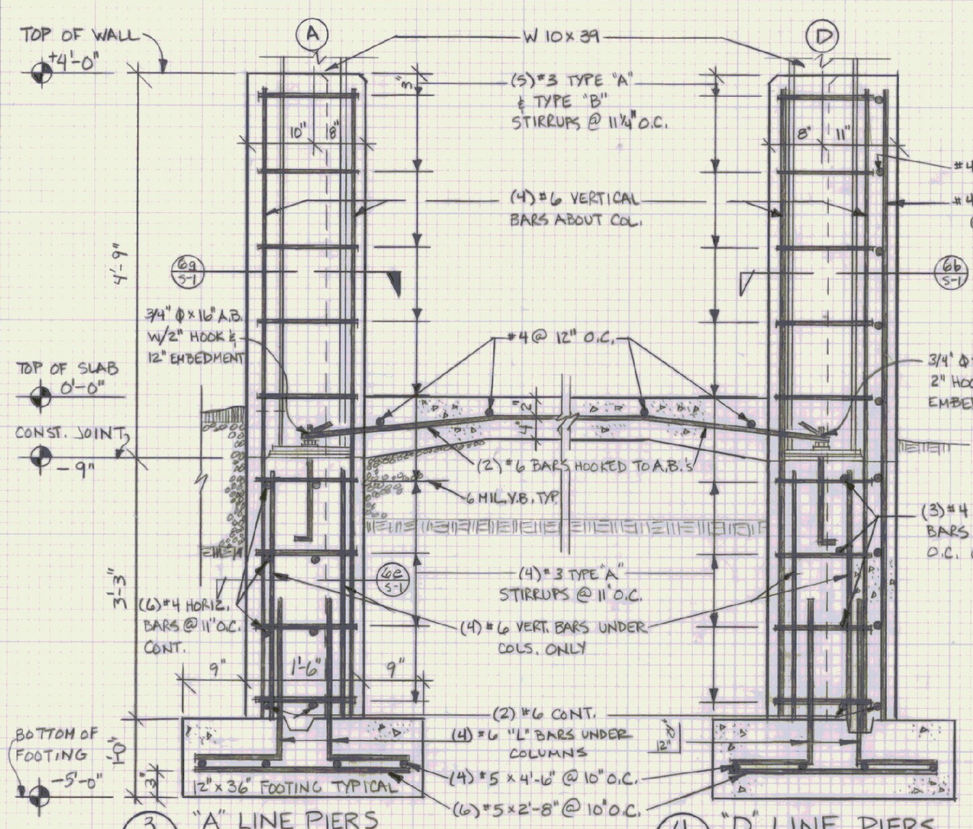

3 S-1 "A" LINE PIERS
SCALE 3/4" = 1'-0"

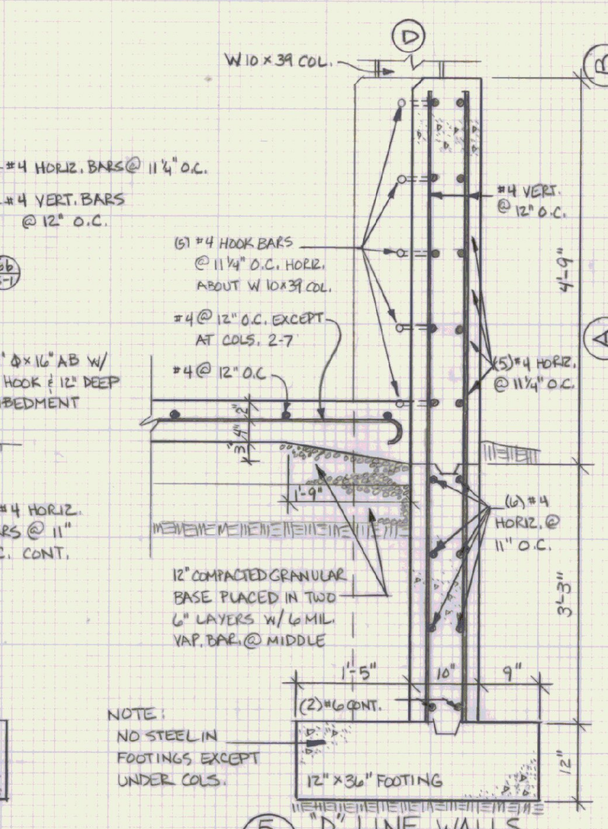

4 S-1 "D" LINE PIERS
SCALE 3/4" = 1'-0"

5 S-1 "D" LINE WALLS
SCALE 3/4" = 1'-0"

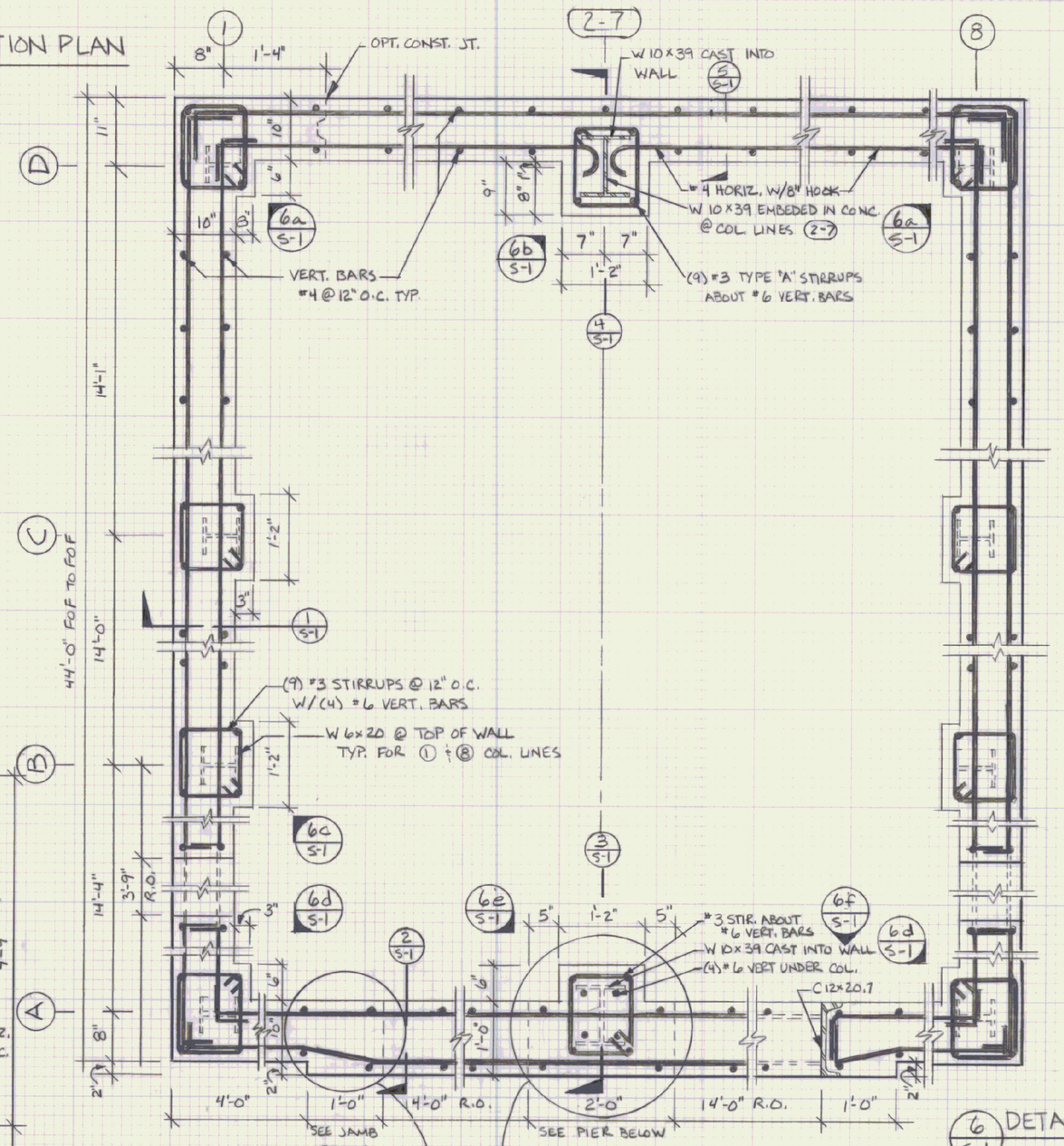

6 S-1 DETAILS - FOUNDATION PLAN
SCALE 3/4" = 1'-0"

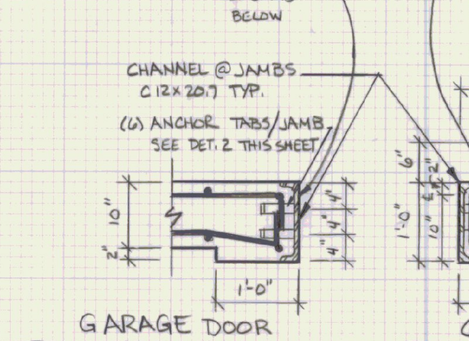

6f S-1 GARAGE DOOR JAMB @ WALL
SCALE 3/4" = 1'-0"

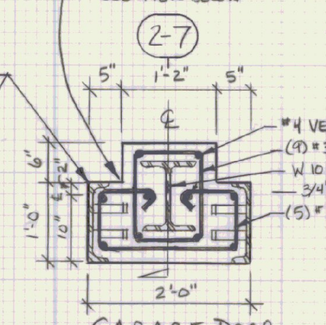

6g S-1 GARAGE DOOR JAMB @ PIER
SCALE 3/4" = 1'-0"

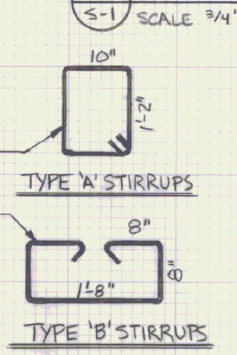

STATE OF VERMONT
DEPARTMENT OF STATE BUILDINGS
AGENCY OF ADMINISTRATION
MONTPELIER, VERMONT

FOUNDATION PLANS & SECTIONS
AGENCY OF TRANSPORTATION
6 BAY MAINTENANCE GARAGE
EAST DORSET, VERMONT

DATE:	SCALE:	REVISIONS:	DWG. NO.
18 APRIL 1990	AS NOTED		S-1
DRAWN BY: T. McCLURE	APPROVED BY: F. FRAIT		16 OF 22