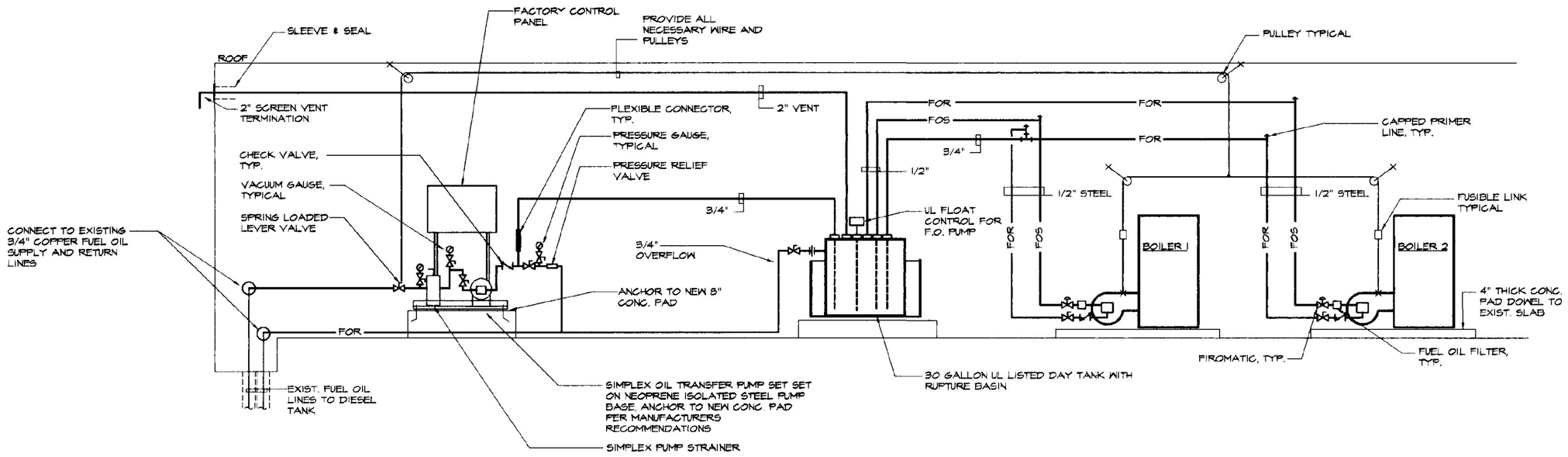

FUEL OIL PIPING DETAIL

NOT TO SCALE

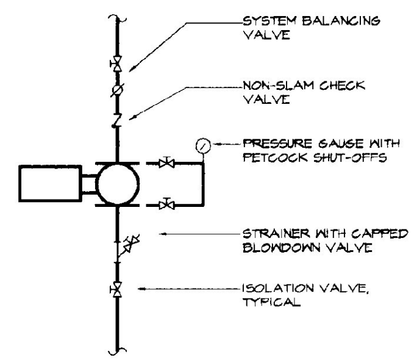

IN-LINE PUMP DETAIL

NO SCALE

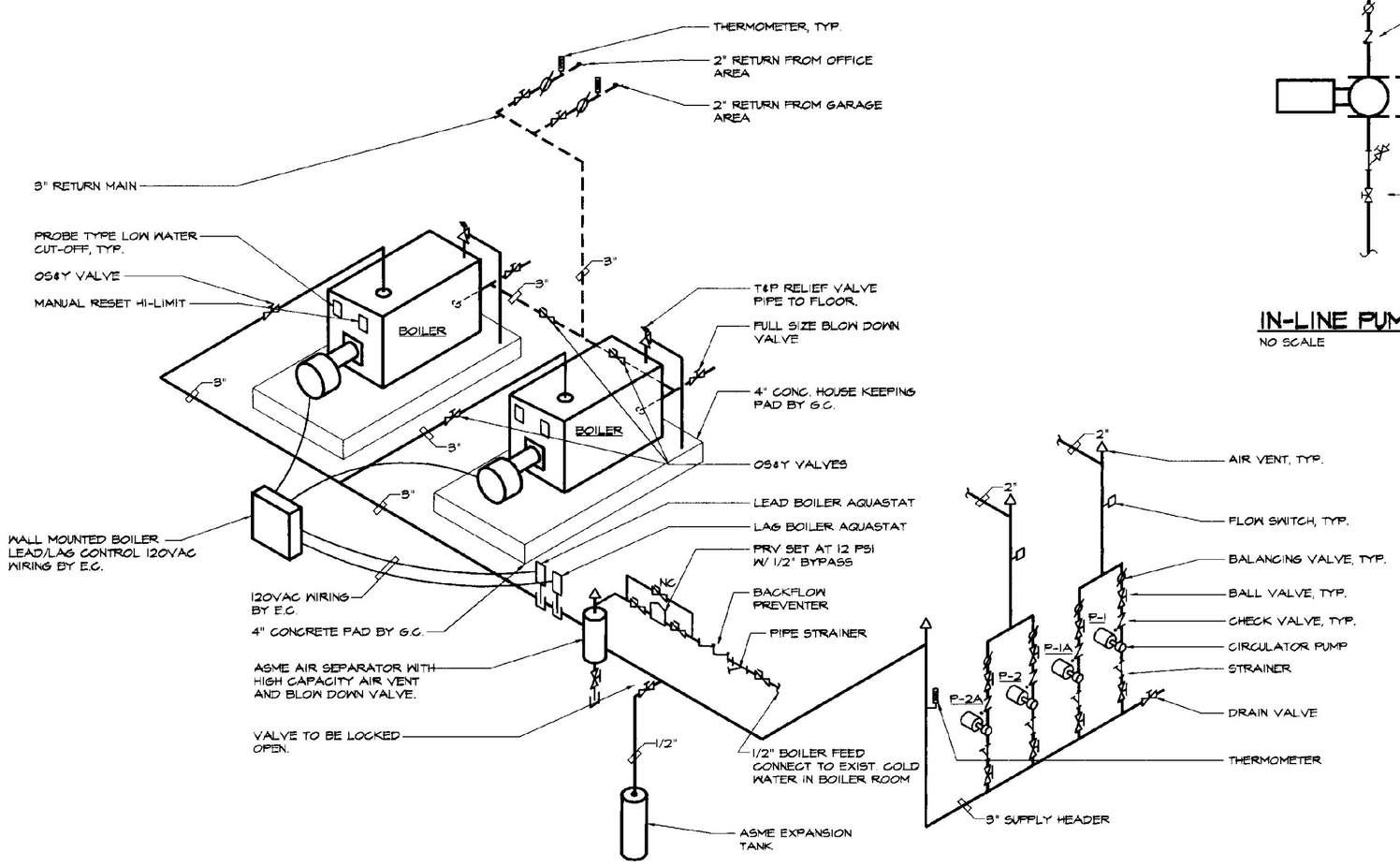

BOILER PIPING DETAIL

NOT TO SCALE

NOTE:
PROVIDE RUN-HOUR METERS FOR BOTH BURNERS

MECHANICAL LEGEND & ABBREVIATIONS

HWS	HOT WATER SUPPLY, E=EXISTING	T_E	EXISTING THERMOSTAT, C=COOLING THERMOSTAT
HWR	HOT WATER RETURN, E=EXISTING	UH	EXISTING UNIT HEATER
F	FIRE PROTECTION PIPING	EF	EXISTING EXHAUST FAN
FOS	FUEL OIL SUPPLY	CH	EXISTING CABINET HEATER
FOR	FUEL OIL RETURN	E = LF	EXISTING RADIATION WITH APPROX. LENGTH OF ACTIVE FIN
	MOTOR OPERATED DAMPER		BASEBOARD RADIATION
	BALL VALVE		PIPE DROP
	2-WAY CONTROL VALVE		PIPE RISER
	AIR VENT		SPRINKLER HEAD
WH	WALL HYDRANT		

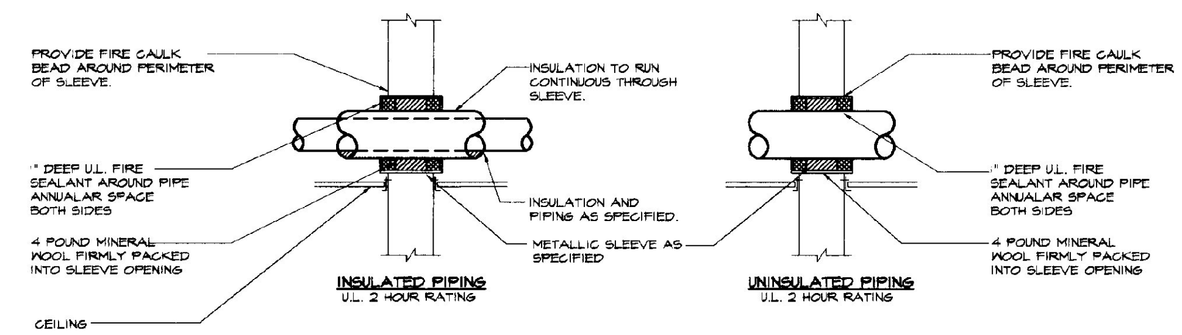

WALL PIPE PENETRATION DETAILS

NOT TO SCALE

NOTE:
1) FOLLOW FIRE SEALANT MANUFACTURERS WRITTEN INSTALLATION INSTRUCTIONS IN CONJUNCTION WITH REQUIREMENTS AS DETAILED.

2) ALL WALL PIPE PENETRATIONS SHALL BE INSTALLED PER THIS DETAIL.

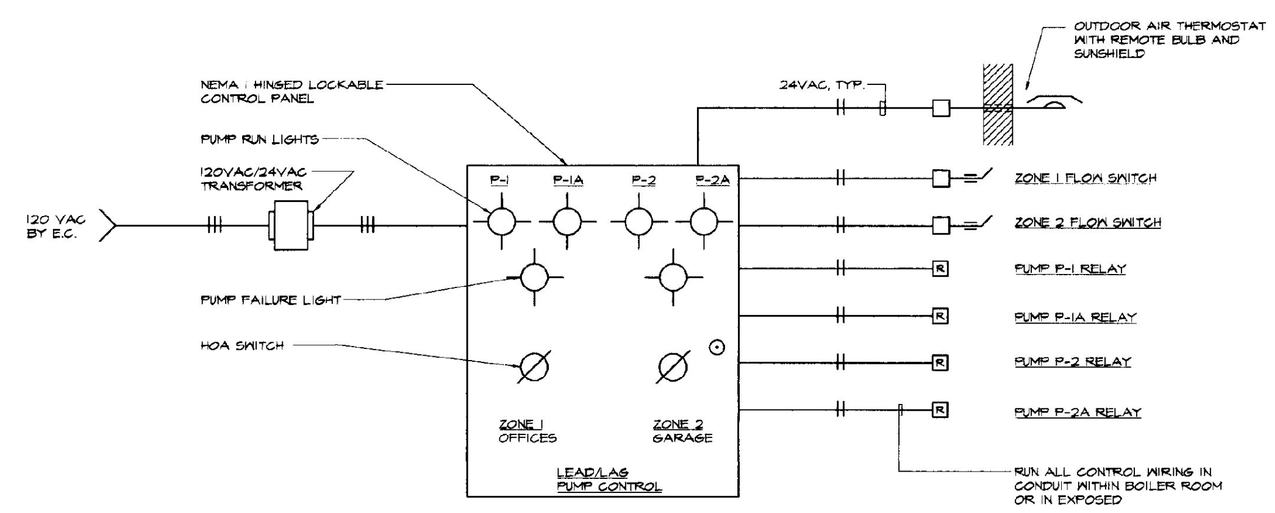

LEAD/LAG PUMP CONTROL PANEL SCHEMATIC

NOT TO SCALE

NOTE:
SUBMIT COMPLETE CONTROL SYSTEM WIRING DIAGRAMS AND CONTROL PANEL DETAIL.

NO.	ISSUED FOR	DATE
2	BIDDING	11/01/01
1	STATE PRELIMINARY REVIEW	10/20/01

LANE ASSOCIATES CONSULTING ENGINEERS, P.C.

HEATING, VENTILATION, & AIR CONDITIONING, PLUMBING, FIRE PROTECTION, & ELECTRICAL

CHARLES F. LANE, P.E.
DANIEL W. DUPRAS, P.E.
WILLIAM C. LANE, P.E.

51 KILLINGTON AVENUE,
RUTLAND, VERMONT 05701

TELEPHONE: (802)747-3346
FAX/MODEM: (802)747-3356

MECHANICAL DETAILS AND MATERIAL SPECIFICATIONS

BENNINGTON DISTRICT NO.1
AOT MAINTENANCE GARAGE
PHASE 1 - HEATING SYSTEM RENOVATION

M 3

APPR:	DWD	DRAWN:	BWM	SCALE:	AS NOTED	PROJ. NO.	0032-07

X:\0132\0132\03\dwg\mechanical\01132003.dwg Fri Nov 02 08:16:44 2001