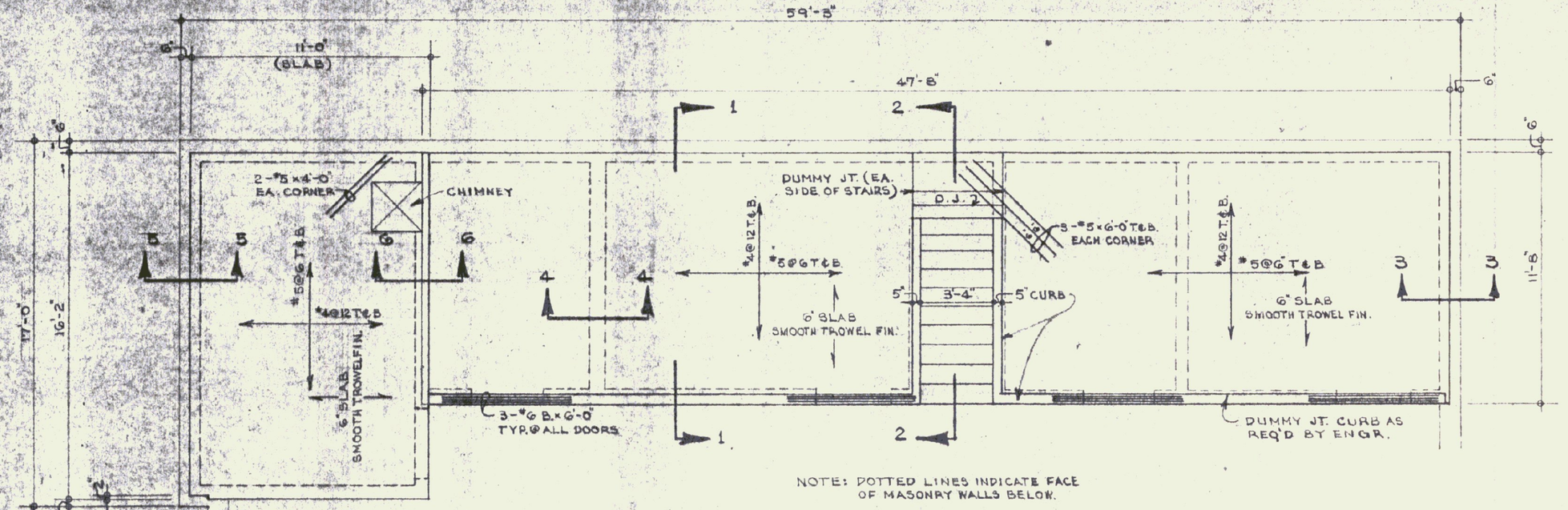

NOTE: DOTTED LINES INDICATE FACE OF MASONRY WALLS BELOW.

PLAN OF CONCRETE SLAB AT MEZZANINE

SCALE: 1/4" = 1'-0"

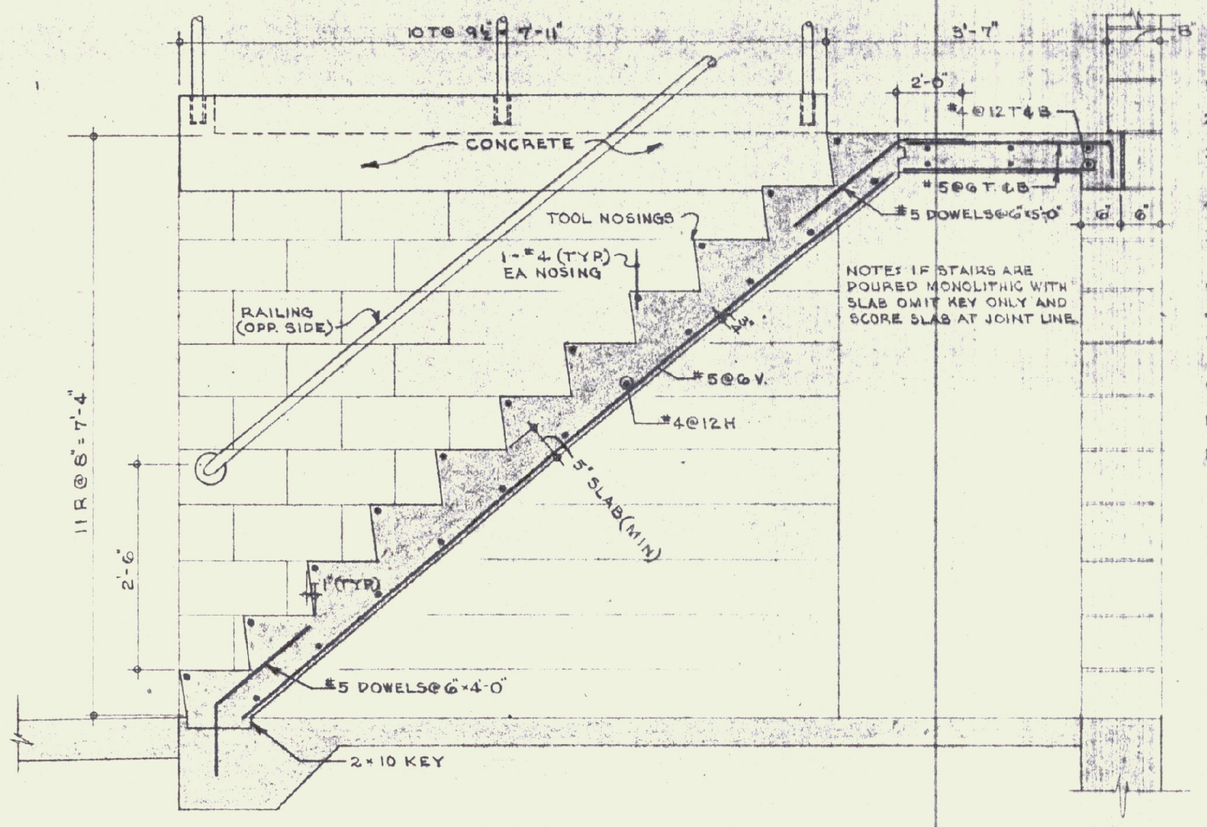

SECTION 2-2

SCALE: 3/4" = 1'-0"

GENERAL NOTES

1. CONCRETE - 3000 PSI @ 28 DAYS, MAXIMUM SLUMP 4".
2. ALL EXPOSED CONCRETE TO BE RUBBED AND CURED.
3. ALL EXPOSED SLABS & CONCRETE STEPS TO BE COVERED & PROTECTED FOR DURATION OF JOB UNTIL ACCEPTANCE.
4. EXPOSED CURB CORNERS TO BE CHAMFERED 1/2".
5. ALL SLAB SHORING TO BE IN PLACE MIN. (3) DAYS @ 70° F. RE-SHORE AFTER STRIPPING - 14 DAYS.
6. PROTECT MASONRY FROM CONCRETE-SLAB DRIPPING.
7. REINFORCING STEEL TO BE LAPPED 40 DIAM.
8. ALL RE-STEEL TO BE PLACED ON SLAB BOLSTERS & HI-CHAIRS. LEGS TO BE P.V.C. PLASTIC.
9. ELECTRICAL CONDUIT TO BE LAYED ABOVE BOTTOM FACE STEEL.
10. ONE SECTION OF RAILINGS EACH SIDE OF STAIRS TO BE REMOVABLE.
11. PIPE RAILING POSTS TO BE LEADED INTO SLEEVES.

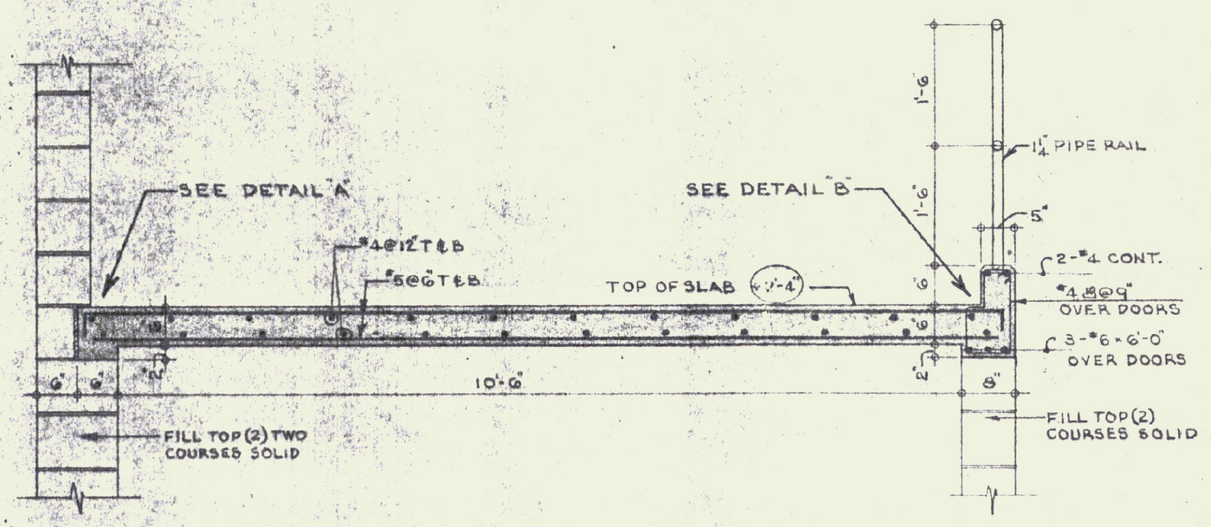

SECTION 1-1

SCALE: 3/4" = 1'-0"

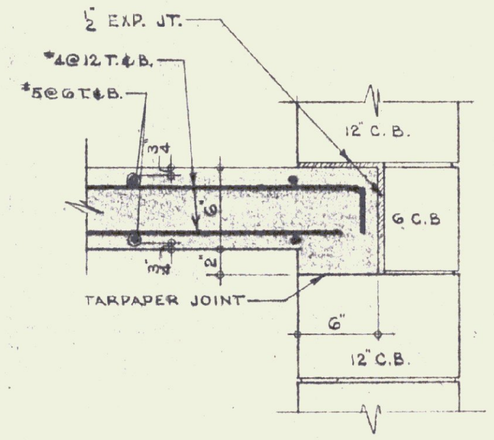

SECTION 3-3

SCALE: 1 1/2" = 1'-0"

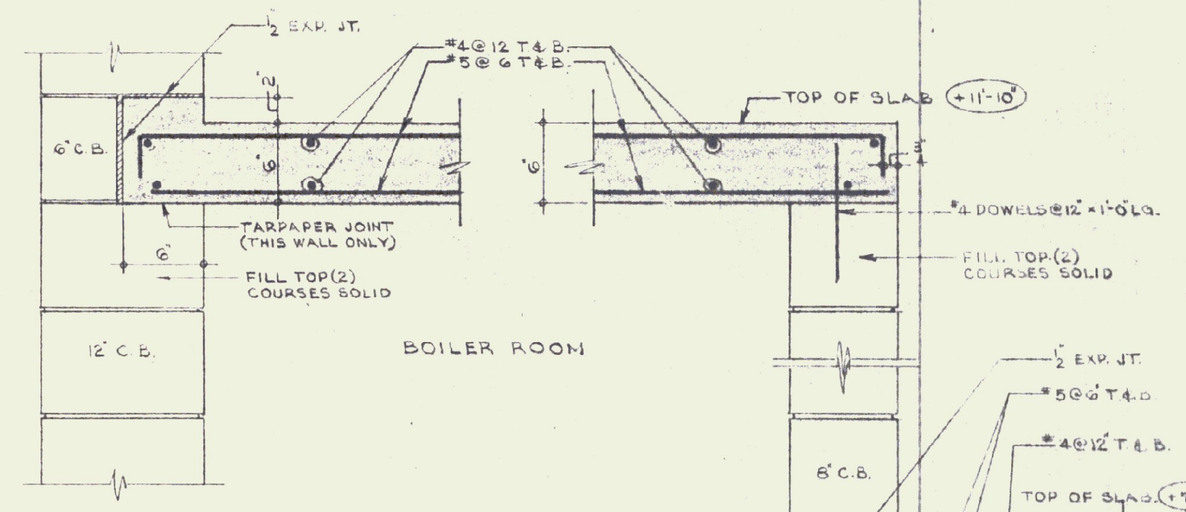

SECTION 5-5

SCALE: 1 1/2" = 1'-0"

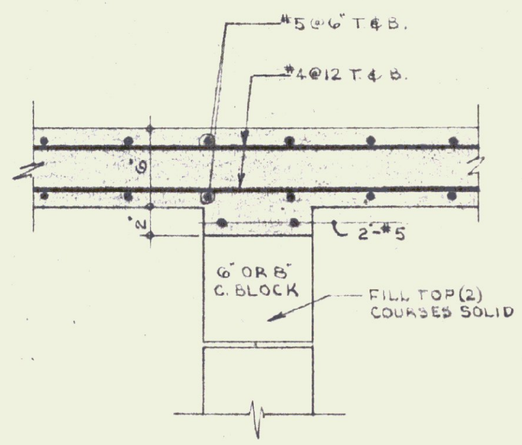

SECTION 4-4

SCALE: 1 1/2" = 1'-0"

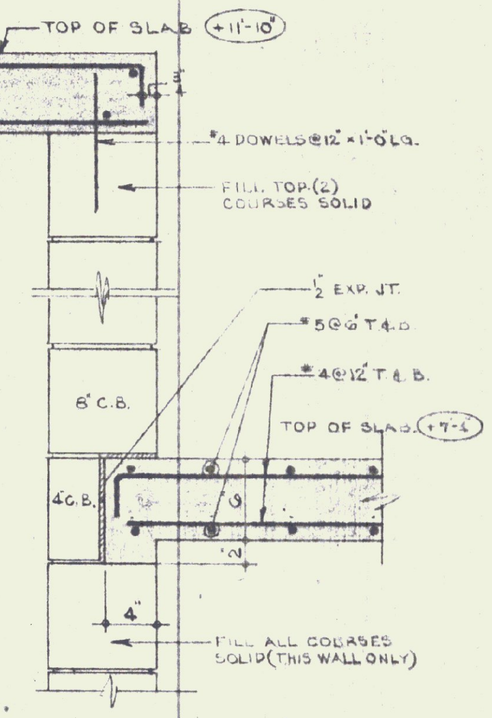

SECTION 6-6

SCALE: 1 1/2" = 1'-0"

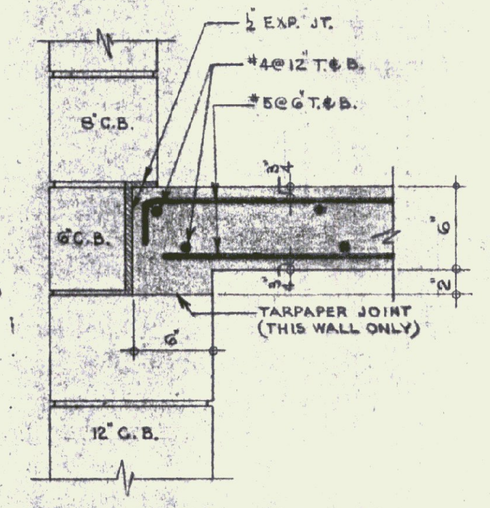

DETAIL "A"

SCALE: 1 1/2" = 1'-0"

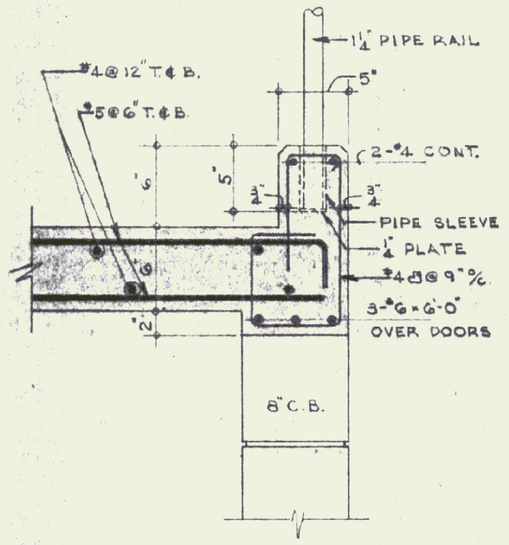

DETAIL "B"

SCALE: 1 1/2" = 1'-0"

REVISIONS	DATE	REVISION

STATE OF VERMONT
DIVISION OF STATE BUILDINGS
AGENCY OF ADMINISTRATION
MONTPELIER, VERMONT

Standard Highway Garage Building
DETAILS OF MEZZANINE, BOILER ROOM SLABS AND CONC. STAIRWAY

SCALE: As noted

DATE: 10-18-74	DESIGNED BY:	DWG. NO. A4
DRAWN BY: STUDIO SEVEN INC.	APPROVED BY:	___ OF ___