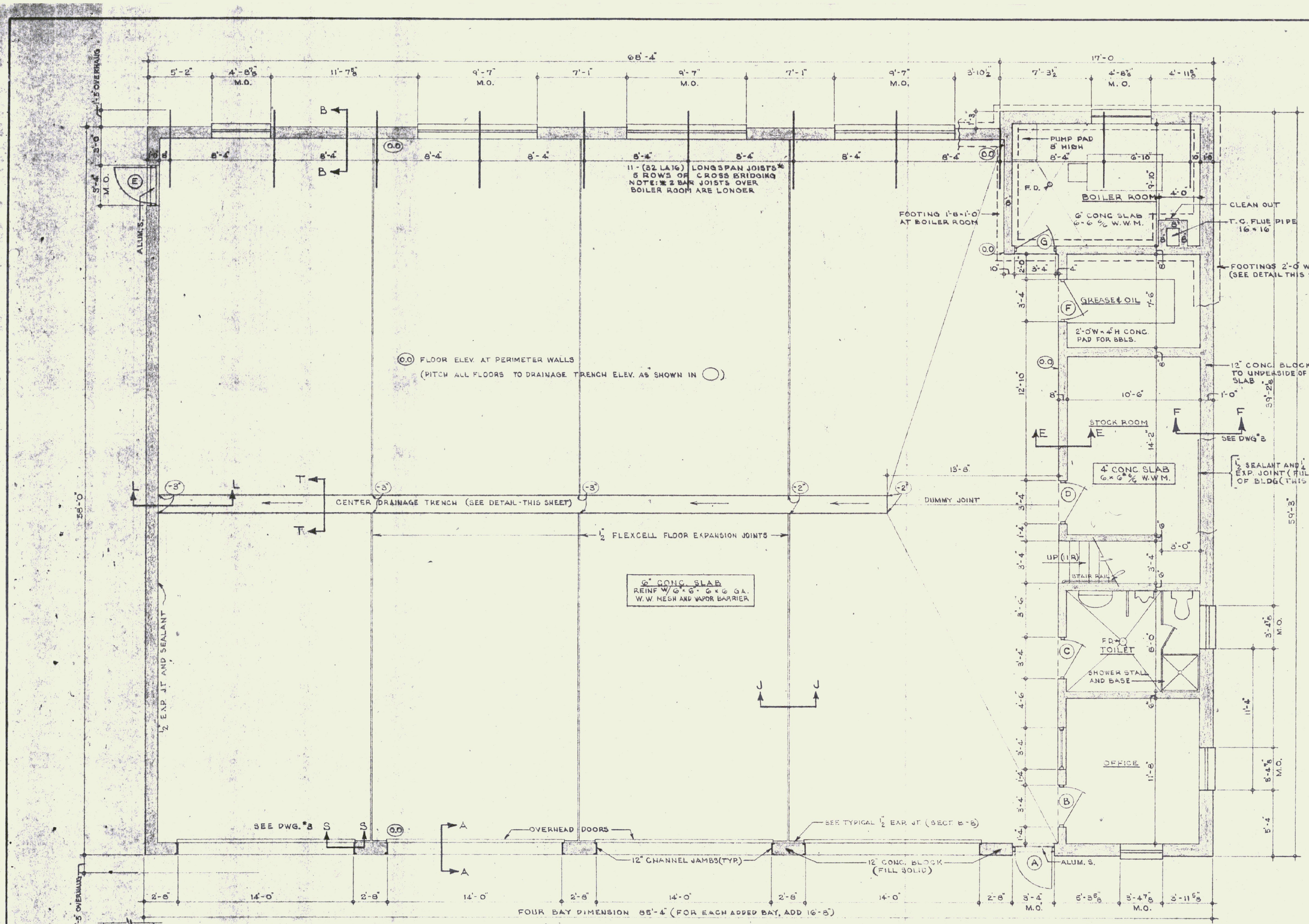

PLAN SCALE 1/4" = 1'-0"

SECTIONS SCALE 1½" = 1'-0"

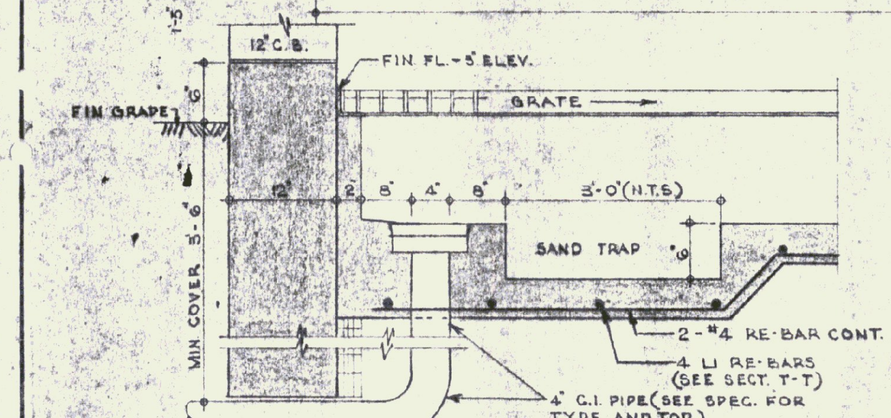

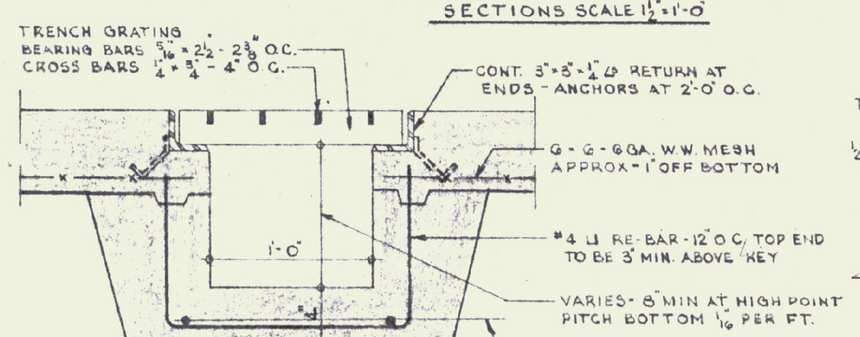

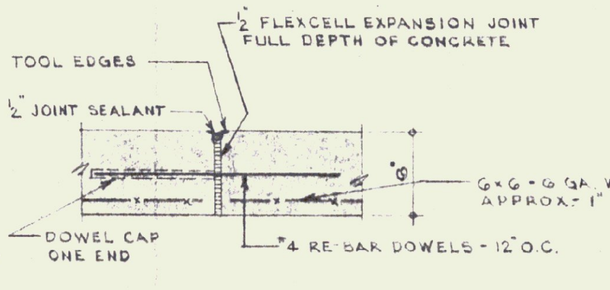

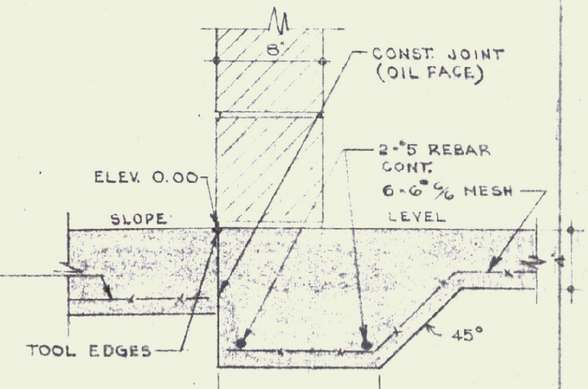

GENERAL NOTES

ALL CONCRETE SHALL BE 3000 PSI AT 28 DAYS / MAX. SLUMP OF 4".
ALL EXPOSED CONCRETE WALLS SHALL BE RUBBED.
CONSTRUCTION JOINTS FOR WALLS TO HAVE ½" V-JOINT IN EXPOSED FACE.
ALL CONCRETE TO BE CURED, 5/6 TO BE COVERED WITH SISALKRAFT.
EXPANSION JOINTS TO HAVE TOOLED EDGES.

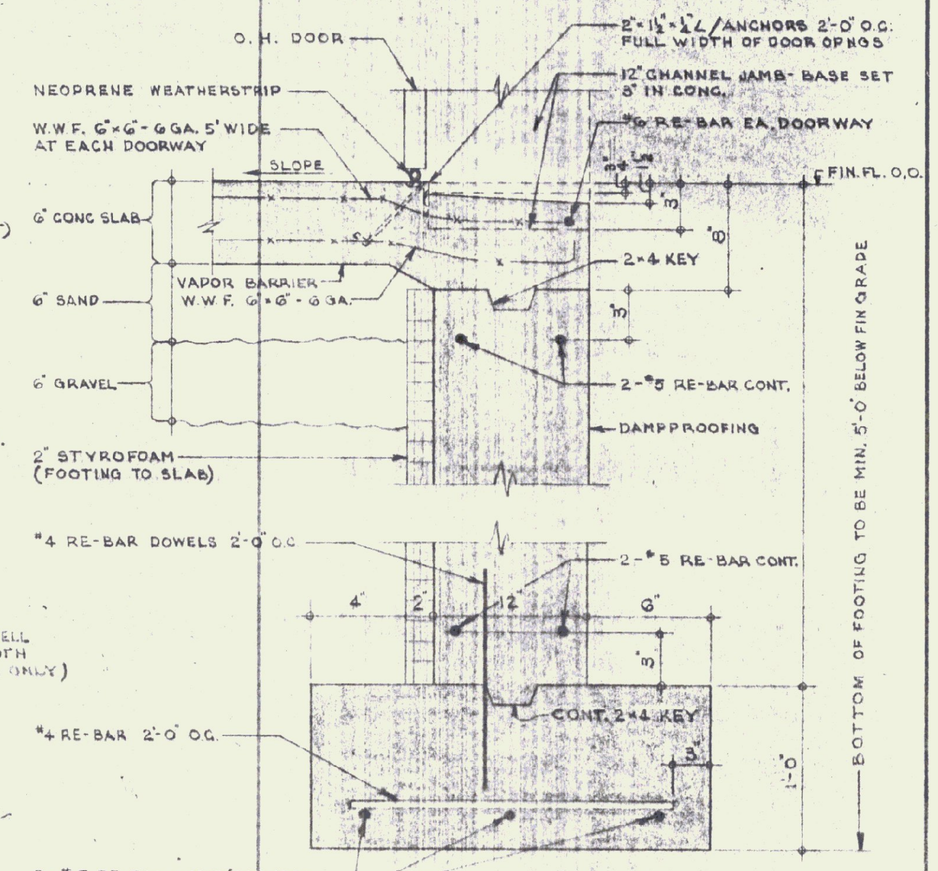

SECTION A-A

TYPICAL AT OH DOORS

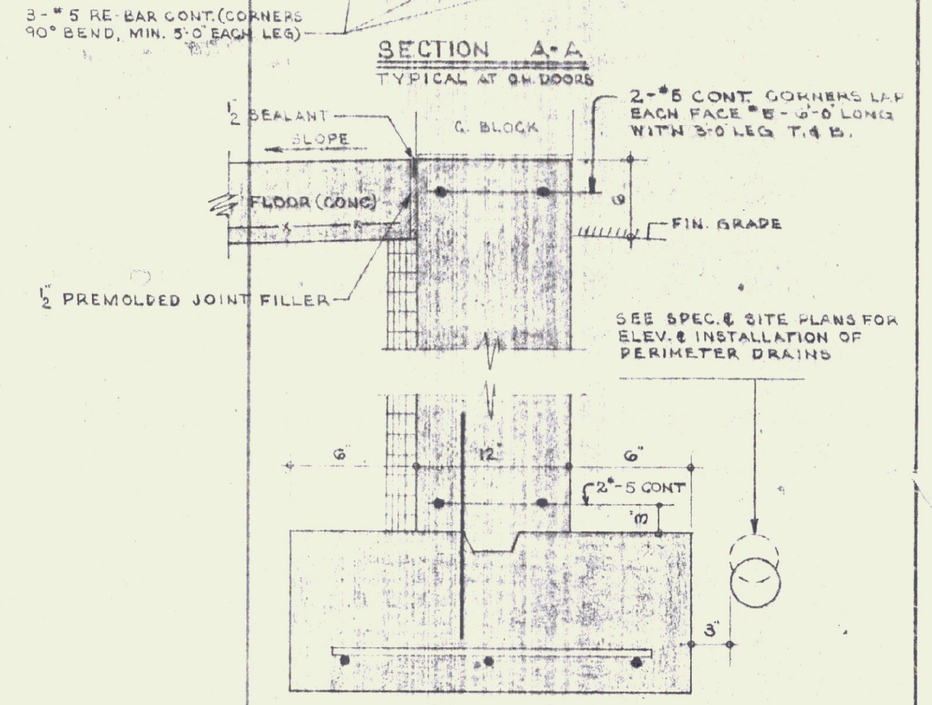

SECTION B-B

TYPICAL FOUNDATION FOR ALL SIDES OF BLDG. EXCEPT AT DOORS. (SEE ABOVE FOR OTHER INFORMATION)

REVISIONS	DATE	REVISION

STATE OF VERMONT
DIVISION OF STATE BUILDINGS
AGENCY OF ADMINISTRATION
MONTPELIER. VERMONT

Standard Four Bay Highway Garage Bldg.
FLOOR PLAN & FOUNDATION DETAILS