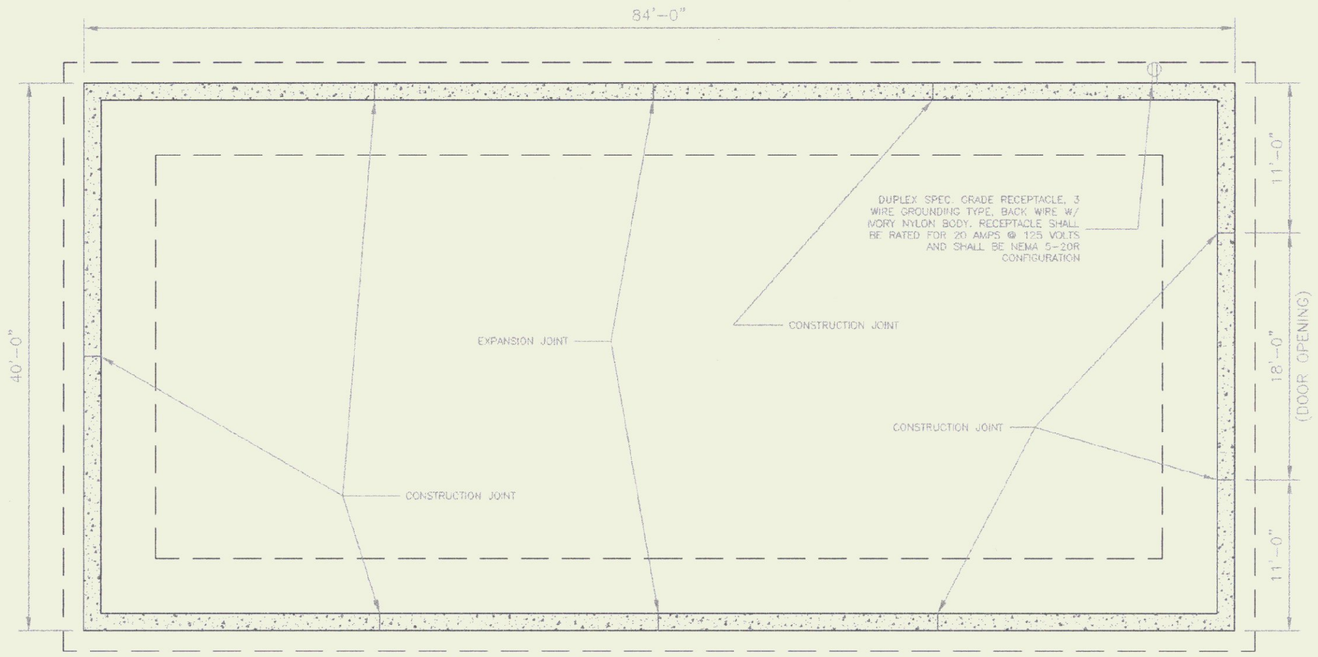

FOUNDATION PLAN
SCALE: 1/8" = 1'-0"

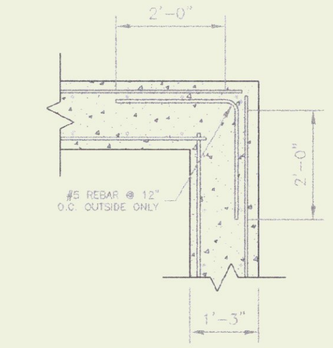

CORNER DETAIL
SCALE: 1/2" = 1'-0"

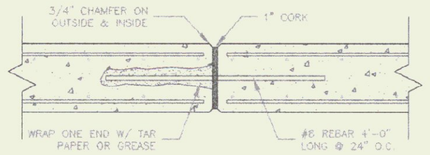

EXPANSION JOINT DETAIL
SCALE: 1/2" = 1'-0"

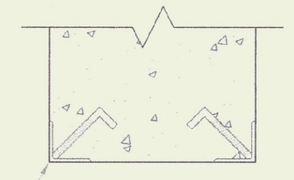

CORNER GUARD DETAIL
SCALE: 1-1/2" = 1'-0"

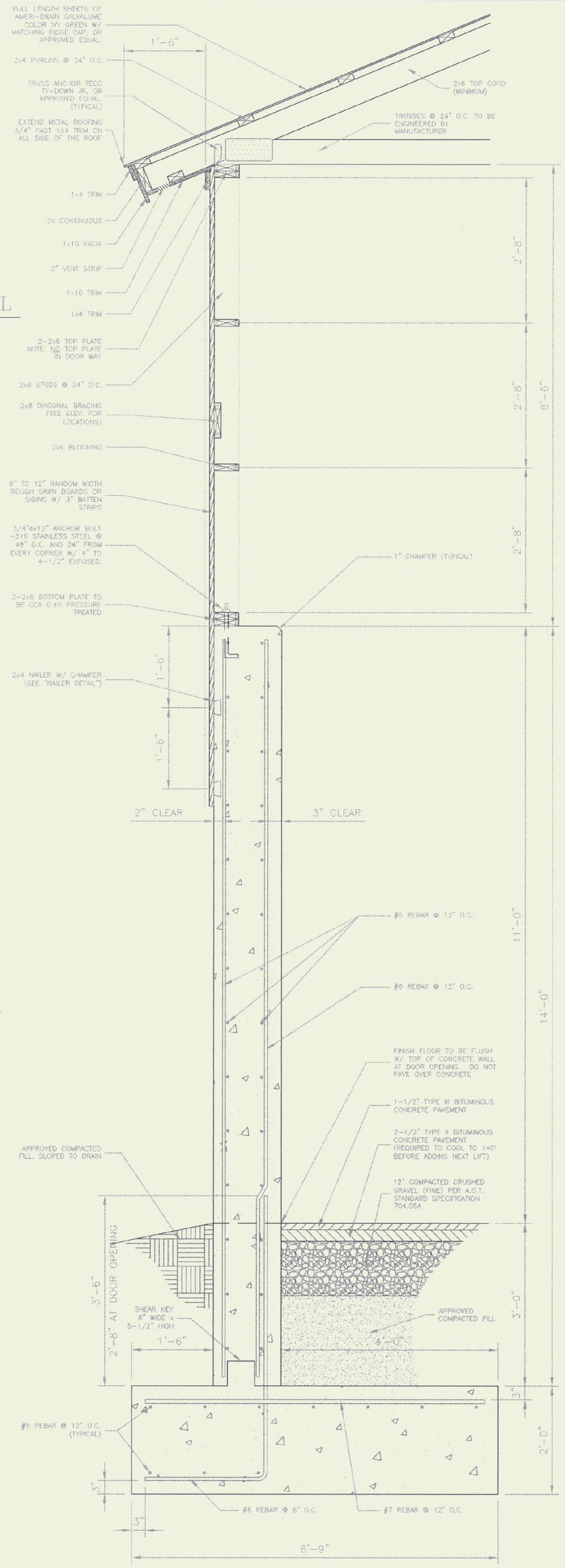

WALL SECTION (TYP.)
SCALE: 3/4" = 1'-0"

TYPICAL OF 4

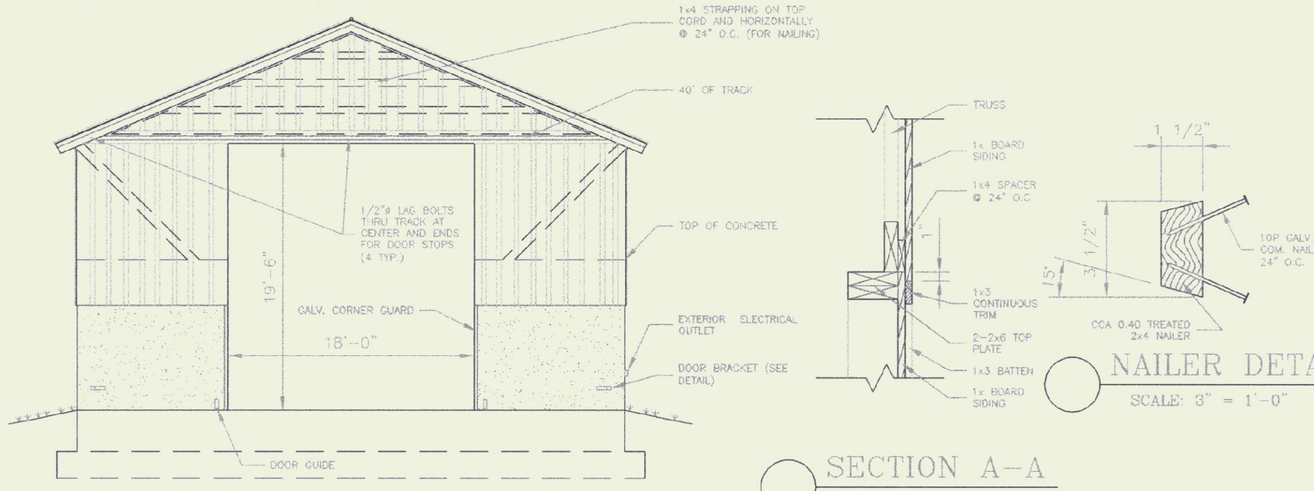

FRONT ELEVATION
SCALE: 1/8" = 1'-0"

NOTE:
ALL ELECTRICAL CONDUIT BELOW GRADE AND ON THE EXTERIOR OF THE BUILDING SHALL BE 1" RIGID METAL CONDUIT. CONDUIT INSIDE THE BUILDING SHALL BE 3/4" SCHEDULE 80 P.V.C.

SECTION A-A
SCALE: 1" = 1'-0"

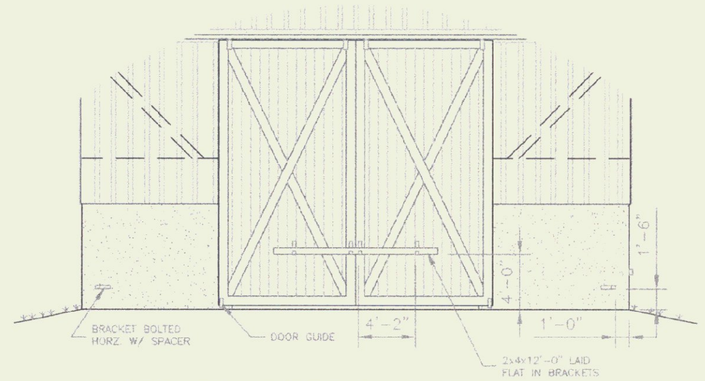

DOOR BRACKET LOCATION
SCALE: 1/8" = 1'-0"

NAILER DETAIL
SCALE: 3" = 1'-0"

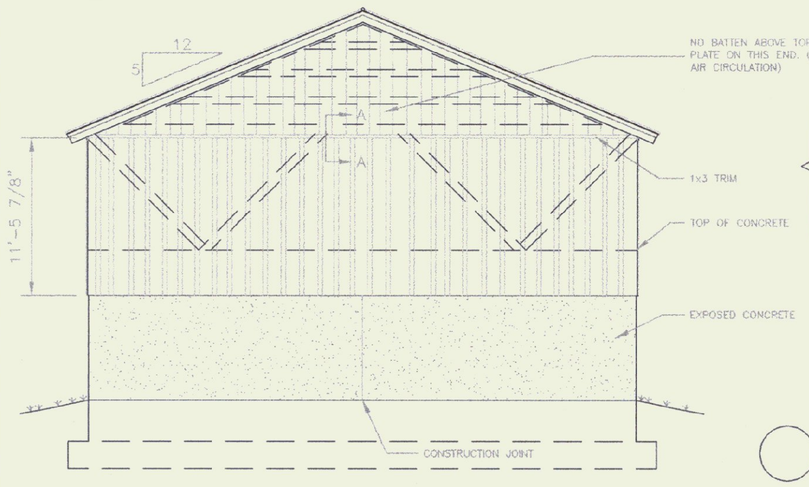

BACK ELEVATION
SCALE: 1/8" = 1'-0"

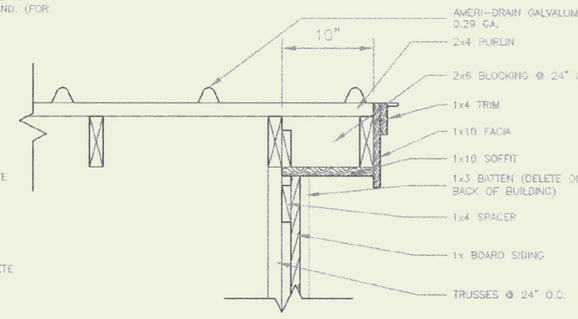

SECTION B-B
SCALE: 1" = 1'-0"

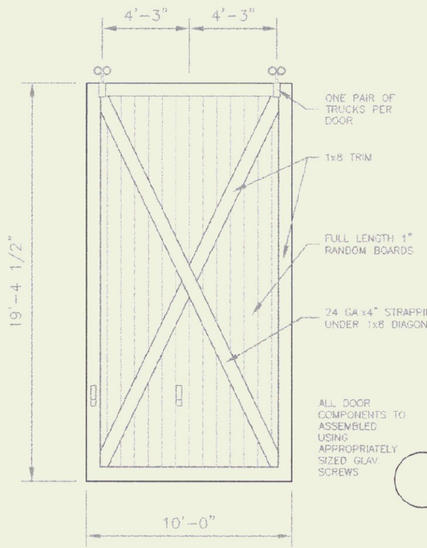

EXT. DOOR DETAIL
SCALE: 3/16" = 1'-0"

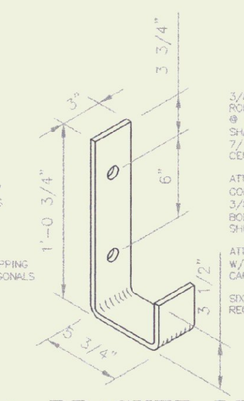

BRACKET DETAIL
SCALE: 1-1/2" = 1'-0"

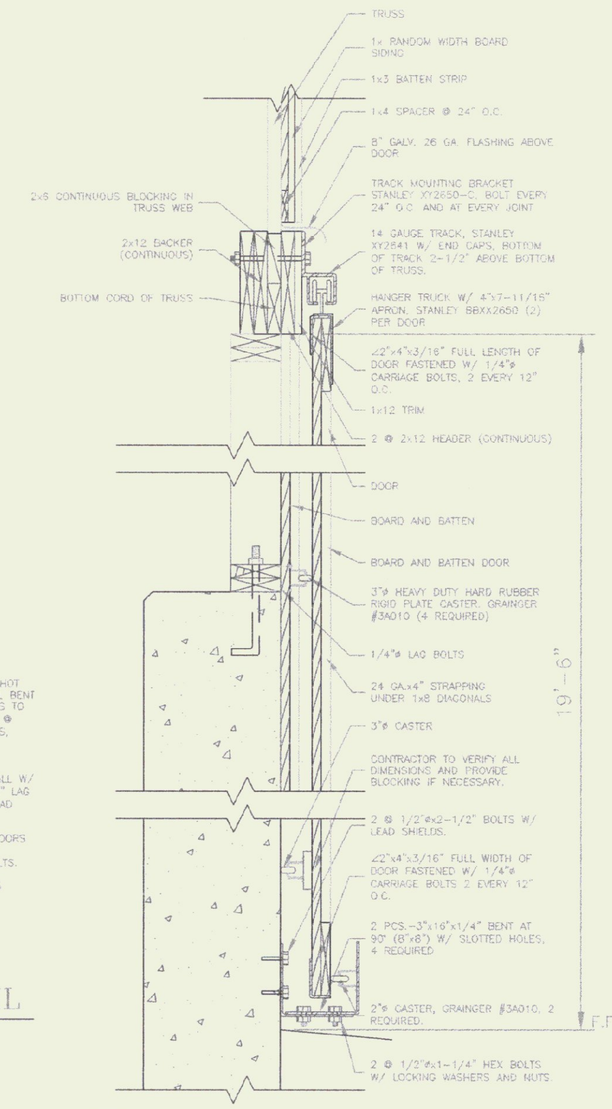

NOTES:
ALL BARE METAL TO BE PAINTED W/ ALKYD BASED FLAT BLACK (2 MILS THICK, DRY MIN.) OVER RUST INHIBITING PRIMER.

ALL HARDWARE TO BE STANLEY HARDWARE OR APPROVED EQUAL.

DOOR TRACK & GUIDE DETAIL
SCALE: 1" = 1'-0"

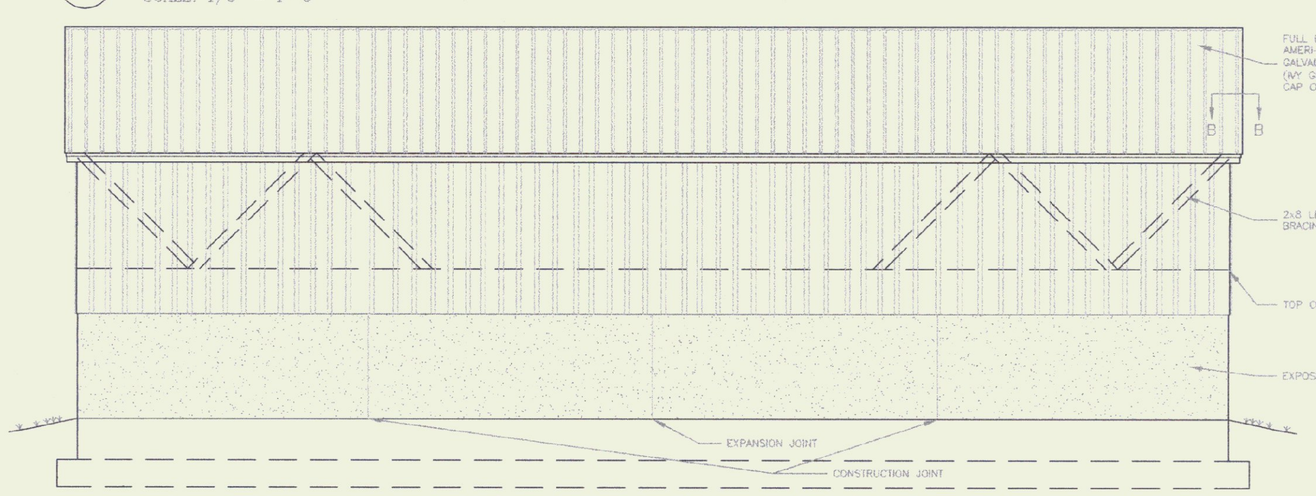

SIDE ELEVATION
SCALE: 1/8" = 1'-0"

GENERAL NOTES:
ALL MATERIALS TO BE FURNISHED BY THE CONTRACTOR.

ALL EXPOSED METAL, EXCEPT GALVANIZED, (CORNER ANGELS, DOOR GUIDES, BRACKETS, ECT.) SHALL BE PAINTED FLAT BLACK (2 MILS THICK, DRY, MIN) OVER RUST INHIBITING PRIMER.

ALL ELECTRICAL WORK SHALL COMPLY WITH N.E.C.

ALL FRAMING AND BOARD & BATTEN SIDING MATERIALS SHALL BE FASTENED USING APPROPRIATELY SIZED GALVANIZED FASTENERS AND ACCORDING TO INDUSTRY STANDARDS.

ALL FOOTING WORK, BACK FILL MATERIAL, FLOOR MATERIAL, ETC. TO BE SUBSIDIARY TO THE LUMP SUM ITEM.

ROOFING COLOR - IVY GREEN (AMERI-DRAIN)

SAND/SALT CAPACITY:
2,330 CY
3,450 TONS

TRUSS NOTES:
TRUSS MANUFACTURER TO SUBMIT TO THE RESIDENT ENGINEER A FULL SET OF ENGINEERED AND STAMPED DRAWINGS FOR APPROVAL PRIOR TO TRUSS MANUFACTURE.

TRUSS MANUFACTURER TO PROVIDE THE CONTRACTOR WITH ALL THE NECESSARY INSTRUCTIONS FOR PROPER TRUSS INSTALLATION, ANCHORAGE, BRACING, LIFTING, ETC.

TRUSS DESIGN IN ACCORDANCE WITH THE 1987 B.O.C.A FOR VERMONT MINIMUM LOADS.

LIVE - 40 P.S.F. - PER 1994 VERMONT FIRE PROTECTION CODE.

DEAD - AS CALCULATED FORM TRUSS AND ROOF MATERIALS AND IN ADDITION 5 P.S.F. ON BOTTOM CHORD

WIND - 25 P.S.F.

DIAGONAL BRACING PER TRUSS MANUFACTURER AND PER MINIMUM TRUSS BRACING DETAIL IN SPECIFICATIONS.

LUMBER NOTES:
FRAMING MEMBERS TO BE KILN DRIED CONST. GRADE SPRUCE S4S MAX. 19% MOISTURE CONTENT.

PLATES & NAILERS IN CONTACT WITH CONCRETE TO BE CCA 0.40 PRESSURE TREATED.

BOARD & BATTEN SIDING TO BE NATIVE ROUGH SAWN EASTERN FIR, SPRUCE, WHITE PINE, OR RED PINE. BOARDS TO BE RANDOM WIDTH 8"-12" - BATTEN WIDTH 3".

BOARD SIDING & STRIPS TO BE FULL LENGTH (NO HORIZONTAL JOINTS). SIDING TO BE KILN DRIED TO MAX. 19% MOISTURE CONTENT BEFORE STAIN IS APPLIED.

ALL FASTENERS TO BE GALVANIZED.

FINISH NOTES:
ROOFING COLOR: AMERI-DRAIN IVY GREEN

ALL BOARDS & BATTEN TO BE STAINED WITH ONE COAT ON ALL SURFACES PRIOR TO INSTALLATION.

AFTER INSTALLATION EXTERIOR SIDING TO RECEIVE ONE (1) ADDITIONAL COAT OF STAIN. STAIN TO BE SHERWIN WILLIAMS OXFORD BROWN OR EQUAL. FIRST COAT WILL BE SEMI-TRANSPARENT & THE SECOND COAT WILL BE HIGH PIGMENT STAIN.

CONCRETE NOTES:
CONCRETE TO BE CLASS "B" PER A.O.T. STANDARD SPECIFICATION TABLE 501.03A WITH 5% ± 1% AIR ENTRAINMENT, AND 2"-4" SLUMP.

1/2" "V" JOINTS IN EXPOSED FACE OF CONSTRUCTION JOINTS.

GALVANIZED L IRON CAST INTO WALL CORNERS AT DOOR OPENINGS.

RE-BAR TO BE CONTINUOUS THROUGH CONSTRUCTION JOINTS.

NO HORIZONTAL CONSTRUCTION JOINTS IN WALLS - CONTINUOUS POUR.

NO CONSTRUCTION OR EXPANSION JOINTS REQUIRED IN FOOTINGS.

CONTRACTOR TO LEAVE NO METAL WITHIN 1" OF SURFACE. USE 1" DEEP PLASTIC CONES AT ALL TIES AND PLUG ALL TIE HOLES WITH AN APPROVED NON-SHRINK GROUT.

ALL RE-BAR TO BE GRADE 60 W/ 3" CLEARANCE ON ALL SIDES UNLESS NOTED OTHERWISE.

RE-BAR TO BE STORED ON BLOCKING 4" MINIMUM ABOVE GROUND.

CONCRETE SUPPLIER TO PROVIDE TEST CYLINDERS FOR CONCRETE TESTING.

ALL CONCRETE TESTING TO BE DONE BY OWNER. CONTRACTOR IS RESPONSIBLE FOR SCHEDULING.

EXPOSED WALLS TO HAVE FORM JOINT RIDGES, TIE HOLES, AND CAVITIES DRESS FINISHED PER A.O.T. STANDARD SECTION 501.16.

WALL FORMS SHALL BE LEFT IN PLACE FOR 72 HOURS MINIMUM.

FOOTING FORMS SHALL REMAIN IN PLACE FOR 24 HOURS MINIMUM.

CONCRETE CURING SHALL FOLLOW IMMEDIATELY AFTER FORM REMOVAL PER A.O.T. STANDARD 501.17. WATER CURING WILL BE REQUIRED, UNLESS ALTERNATE MEANS OF CURING IS APPROVED, IN WRITING, BY THE PROJECT ENGINEER.

STATE OF VERMONT
Department of Buildings and General Services
Agency of Administration
Montpelier, Vermont

AGENCY OF TRANSPORTATION
PROJECT TITLE
40' x 84' SALT SHED
NAME OF TOWN VERMONT

REVISIONS
12/29/97 GDN
7/8/98 GDN
2/10/99 BTM
10/22/99 ADW

SCALE: AS NOTED
DATE: January 1996
DRAWN BY: B. McAvoy
APPR. BY: PROJECT ENGINEER

A.O.T.
40' x 84'
SALT SHED
TOWN

N-#

OF