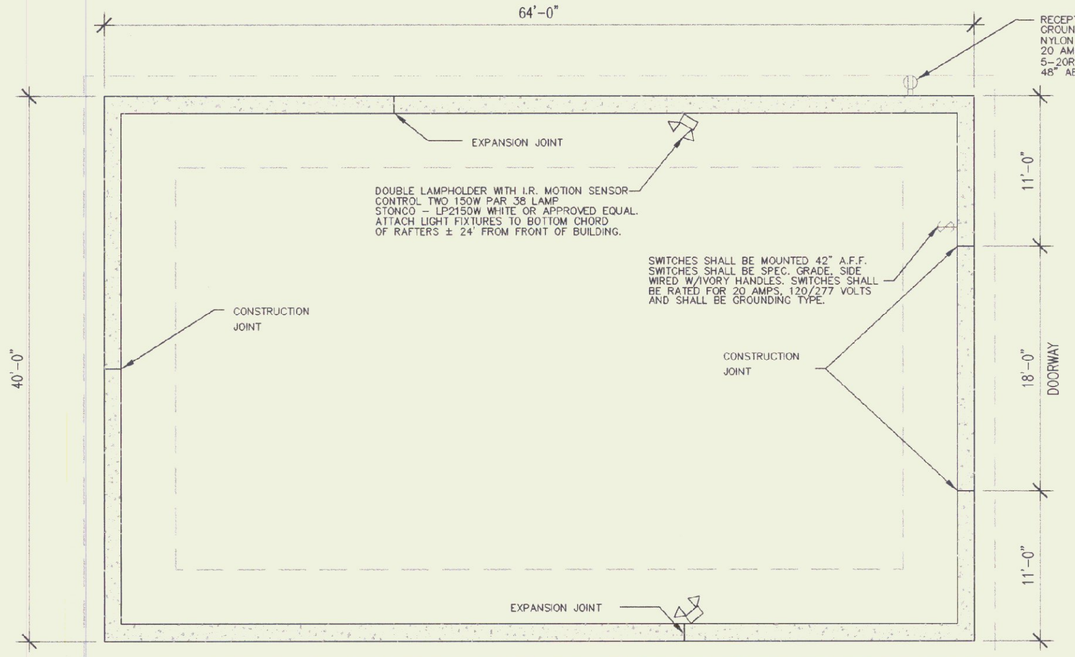

FOUNDATION PLAN

SCALE: 1/8" = 1'-0"

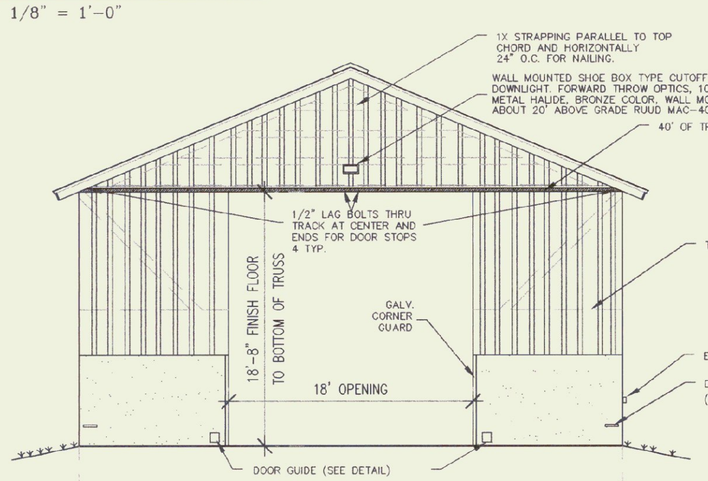

NOTE:
ALL ELECTRICAL CONDUIT BELOW GRADE AND ON THE EXTERIOR OF THE BUILDING SHALL BE 1" RIGID CONDUIT. CONDUIT INSIDE THE BUILDING SHALL BE 3/4" SCHEDULE 80 P.V.C.

FRONT ELEVATION

SCALE: 1/8" = 1'-0"

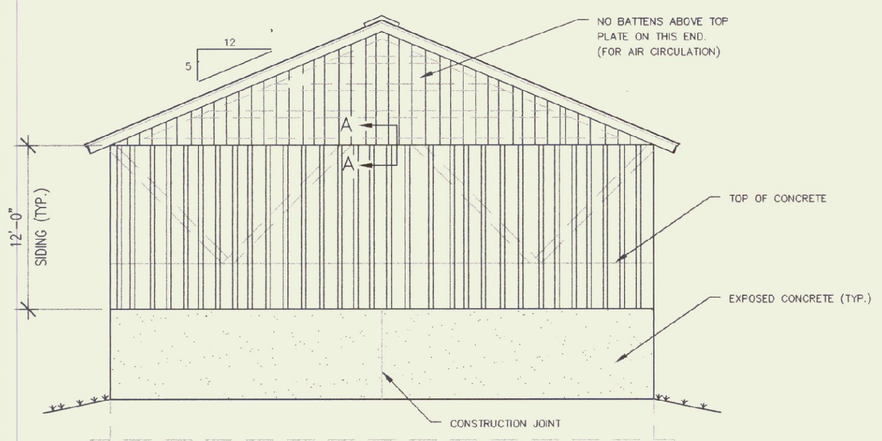

BACK ELEVATION

SCALE: 1/8" = 1'-0"

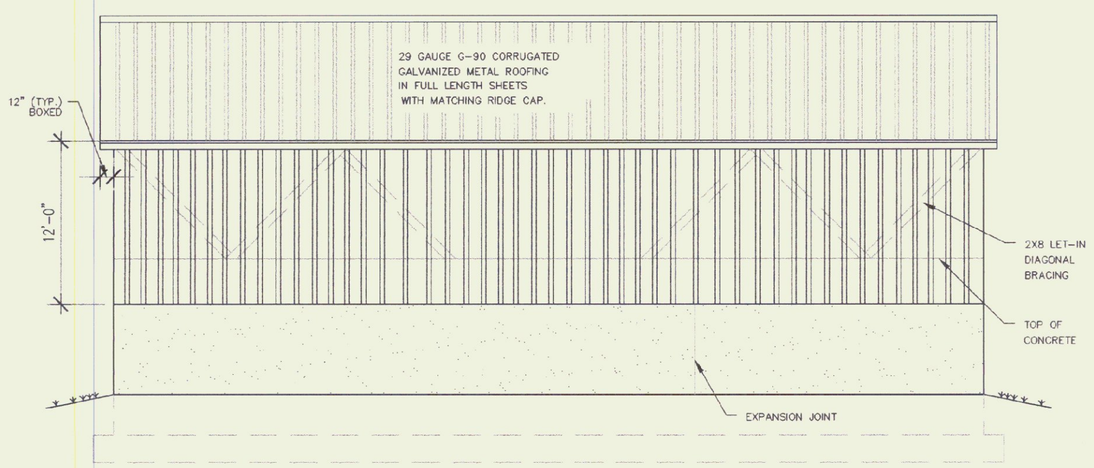

SIDE ELEVATION

SCALE: 1/8" = 1'-0"

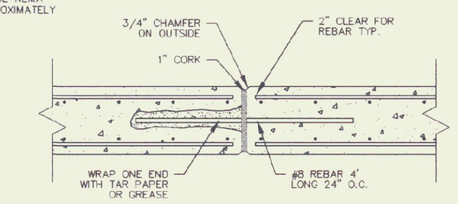

EXPANSION JOINT DETAIL

N.T.S.

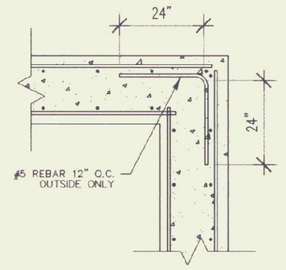

CORNER DETAIL

N.T.S.

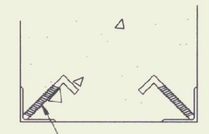

3"X3"X1/4" ANGLE IRON (A-36 STEEL) WITH 1/2"Ø5" LONG ANCHOR BOLTS WELDED 18" O.C. FULL DOORWAY HEIGHT. HOT DIP GALV. AFTER FABRICATION, PRIOR TO INSTALLATION.

CORNER GUARD

N.T.S.

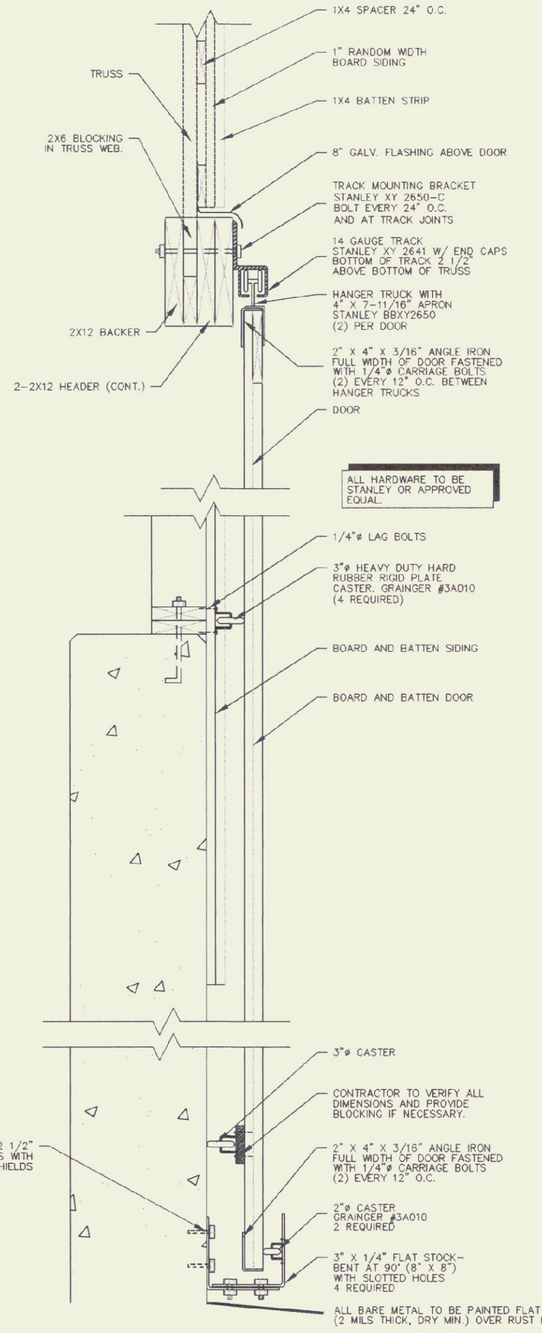

DOOR TRACK & GUIDE DETAIL

N.T.S.

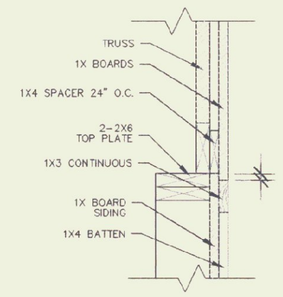

SECTION A-A

N.T.S.

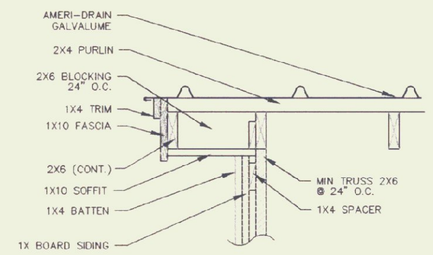

SECTION B-B

N.T.S.

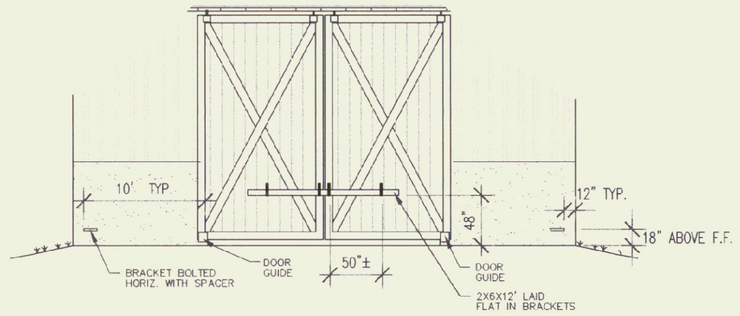

DOOR BRACKET LOCATION

N.T.S.

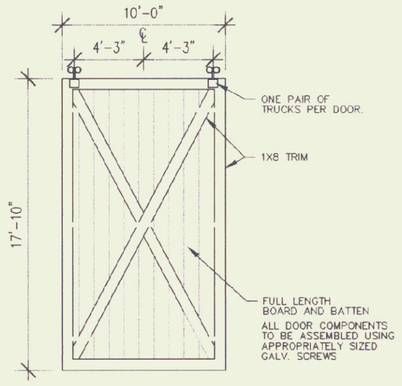

EXT. DOOR DETAIL

N.T.S.

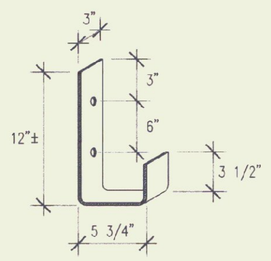

3/8" X 3" X 22" HOT ROLLED STEEL BENT AT 90° ANGLES TO SHAPE WITH 2- 7/16" HOLES, CENTERED

ATTACH TO CONCRETE WALL WITH 3/8"Ø X 2-1/2" LAG BOLTS WITH LEAD SHIELDS

ATTACH TO DOORS WITH 3/8"Ø X 3" CARRIAGE BOLTS. (SIX BRACKETS REQUIRED.)

DOOR BRACKET DETAIL

N.T.S.

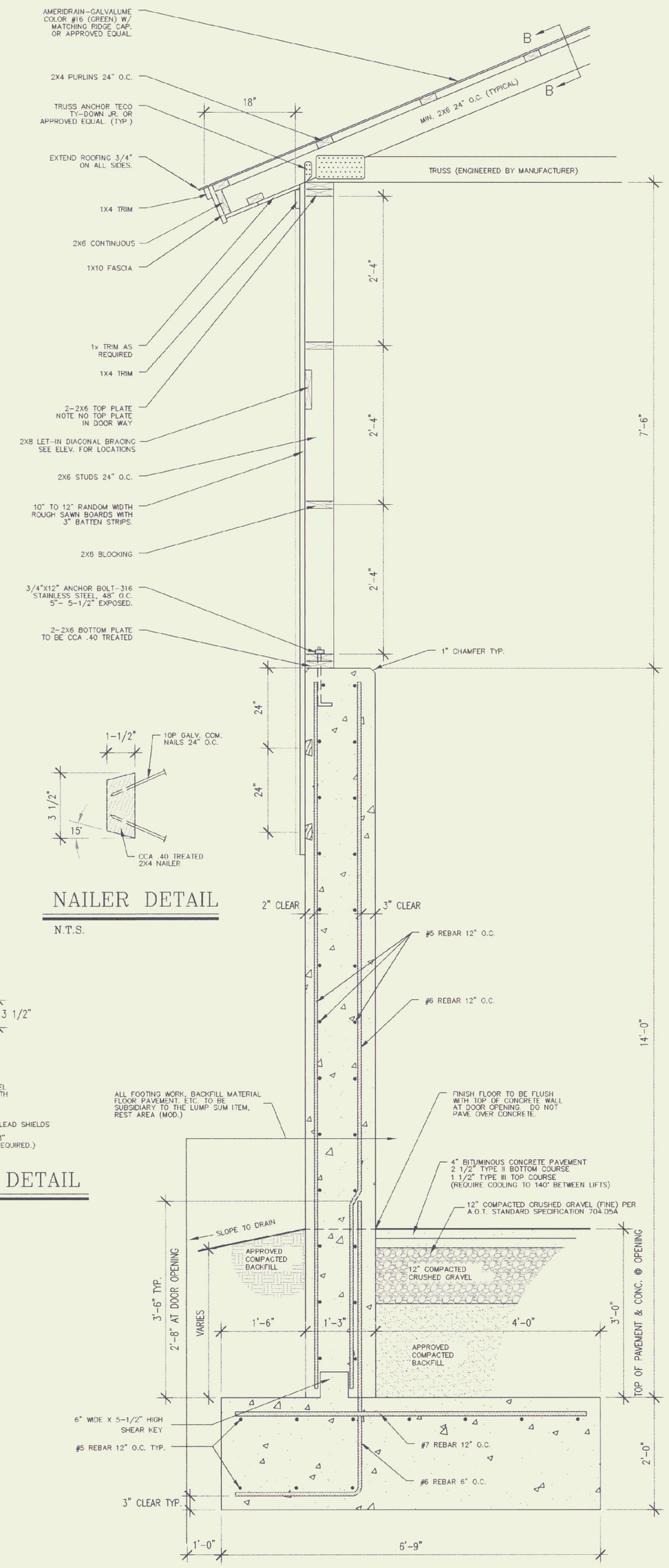

NAILER DETAIL

N.T.S.

WALL SECTION (TYP.)

3/4" = 1'-0"

GENERAL NOTES:

ALL MATERIAL TO BE FURNISHED BY CONTRACTOR.

ALL EXPOSED METAL, EXCEPT GALVANIZED, (CORNER ANGLES, DOOR GUIDES, BRACKETS ETC.) SHALL BE PAINTED FLAT BLACK (2 MILS THICK, DRY, MIN.) OVER RUST INHIBITING PRIMER.

ALL ELECTRICAL WORK SHALL COMPLY WITH N.E.C.

ALL FRAMING AND BOARD & BATTEN SIDING MATERIALS SHALL BE FASTENED USING APPROPRIATELY SIZED FASTENERS & ACCORDING TO INDUSTRY STANDARDS.

TRUSS NOTES:

TRUSS MANUFACTURER TO SEND SUBMISSIONS TO THE RESIDENT ENGINEER A FULL SET OF ENGINEERED AND STAMPED DRAWINGS FOR APPROVAL PRIOR TO TRUSS MANUFACTURE.

TRUSS MANUFACTURER TO PROVIDE THE CONTRACTOR WITH ALL THE NECESSARY INSTRUCTIONS FOR PROPER TRUSS INSTALLATION, ANCHORAGE, BRACING, LIFTING, ETC.

TRUSS DESIGN IN ACCORDANCE WITH THE 1987 B.O.C.A. FOR VERMONT

MINIMUM LOADS:

LIVE - 60 P.S.F - PER 1994 VERMONT FIRE PROTECTION CODE.

DEAD - AS CALCULATED FROM TRUSS AND ROOF MATERIALS AND IN ADDITION 5 P.S.F. ON BOTTOM CHORD.

WIND - 25 P.S.F.

DIAGONAL BRACING PER TRUSS MANUFACTURER AND PER MINIMUM TRUSS BRACING DETAIL IN SPECIFICATIONS.

FINISH NOTES:

ALL BOARDS & BATTENS TO BE STAINED WITH ONE COAT ALL SURFACES PRIOR TO INSTALLATION.

AFTER INSTALLATION EXTERIOR SIDING TO RECEIVE (1) ADDITIONAL COAT OF STAIN. STAIN TO BE SHERWIN WILLIAMS OXFORD BROWN OR EQUAL. FIRST COAT WILL BE SEMI-TRANSPARENT & THE SECOND COAT WILL BE HIGH PIGMENT STAIN.

CONCRETE NOTES:

- ALL CONCRETE TO BE 3500 PSI @ 28 DAYS WITH A MAXIMUM SLUMP OF 4".
- CONCRETE TO BE CLASS "B" PER A.O.T. STANDARD SPEC. 501.25 WITH 6%-8% AIR ENTRAINMENT.
- 1/2" "V" JOINTS IN EXPOSED FACE OF CONSTRUCTION JOINTS.
- 3/4" CHAMFER ON EACH FACE OF EXPANSION JOINTS.
- GALVANIZED L IRON CAST INTO WALL CORNERS AT DOOR OPENINGS.
- RE-BAR TO BE CONTINUOUS THROUGH CONSTRUCTION JOINTS.
- NO HORIZONTAL CONSTRUCTION JOINTS IN WALLS - CONTINUOUS POUR.
- NO CONSTRUCTION OR EXPANSION JOINTS REQUIRED IN FOOTINGS.
- CONTRACTOR TO LEAVE NO METAL WITHIN 1" OF SURFACE. USE 1" DEEP PLASTIC CONES AT ALL TIES AND PLUG ALL TIE HOLES WITH AN APPROVED NON-SHRINK GROUT.
- ALL RE-BAR TO BE GRADE 60.
- RE-BAR TO BE STORED ON BLOCKING 4" MIN. ABOVE GROUND.
- CONCRETE SUPPLIER TO PROVIDE TEST CYLINDERS FOR CONCRETE TESTING.
- ALL CONCRETE TESTING TO BE DONE BY OWNER. CONTRACTOR IS RESPONSIBLE FOR SCHEDULING.
- EXPOSED WALLS TO BE DRESS FINISHED PER A.O.T SPECIFICATIONS.

LUMBER NOTES:

FRAMING MEMBERS TO BE KILN DRIED CONST. GRADE SPRUCE S4S MAX. 19% MOISTURE CONTENT.

PLATES & NAILERS IN CONTACT WITH CONCRETE TO BE CCA .40 TREATED.

BOARD & BATTEN SIDING TO BE NATIVE ROUGH SAWN WHITE PINE. BOARDS TO BE RANDOM WIDTH 8"-12" - BATTEN WIDTH 3".

BOARD SIDING & BATTEN STRIPS TO BE FULL LENGTH (NO HORIZONTAL JOINTS). SIDING TO BE KILN DRIED TO MAX. 19% MOISTURE CONTENT BEFORE STAIN IS APPLIED.

ALL NAILS TO BE GALVANIZED.

SALT/SAND STORAGE CAPACITY:

1,590 CY
2,360 TONS

STATE OF VERMONT
DEPARTMENT OF BUILDINGS AND GENERAL SERVICES
AGENCY OF ADMINISTRATION
MONTPELIER, VERMONT

LOCATION & BUILDING
40' X 64' SALT SHED

VERMONT

REVISIONS		
12-29-97	G.D.N.	
7-7-98	C.D.N.	
1-11-99	B.T.M.	
2-10-99	B.T.M.	

SCALE: AS NOTED
DATE: JAN 1997
DRAWN BY: G. D. NORWOOD
APPR. BY:

LOCATION

PROJECT PROJECT

FLOOR PLAN

A-1

1 OF 1