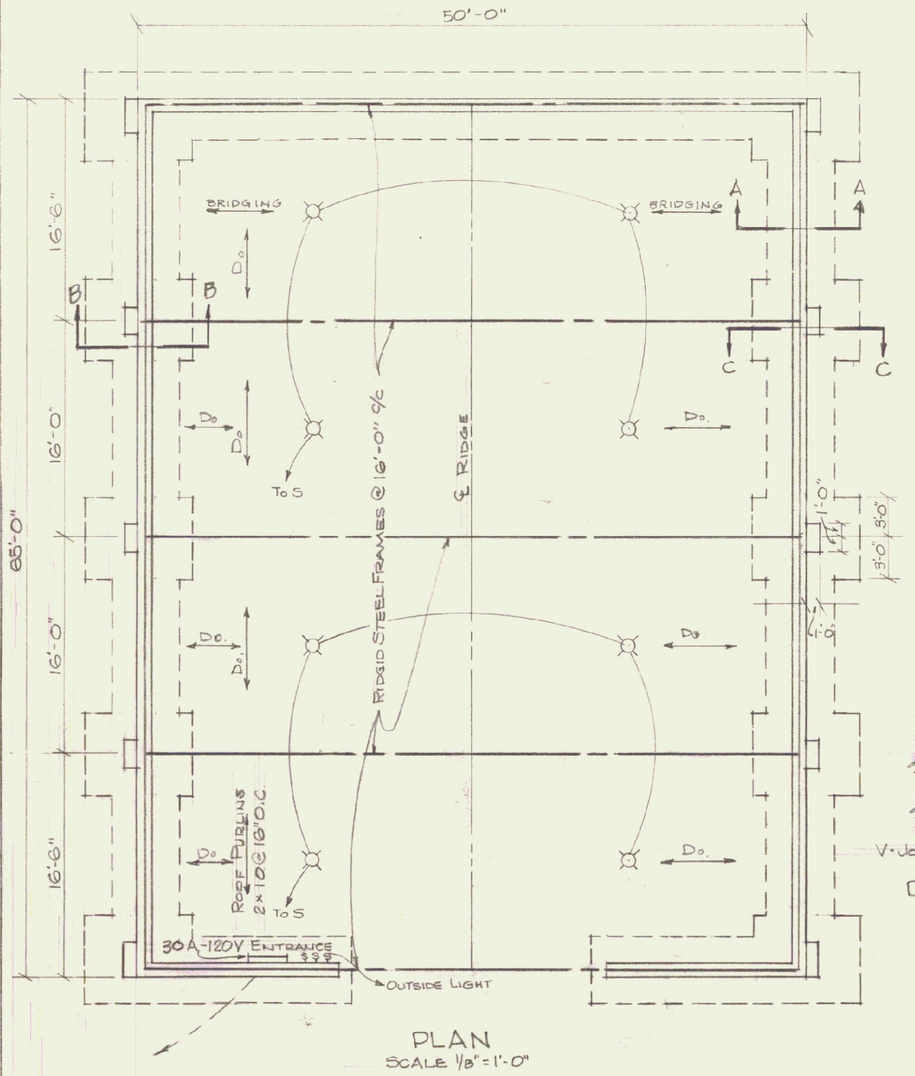

PLAN
SCALE 1/8" = 1'-0"

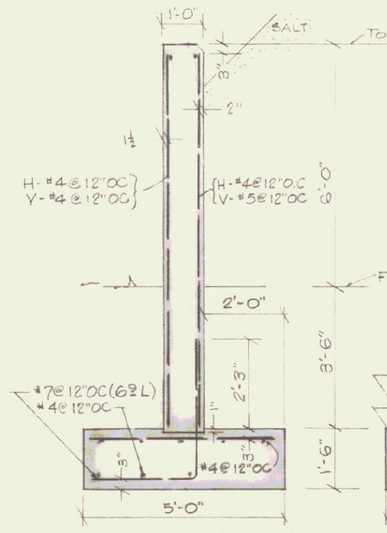

SECTION A-A
SCALE 3/8" = 1'-0"

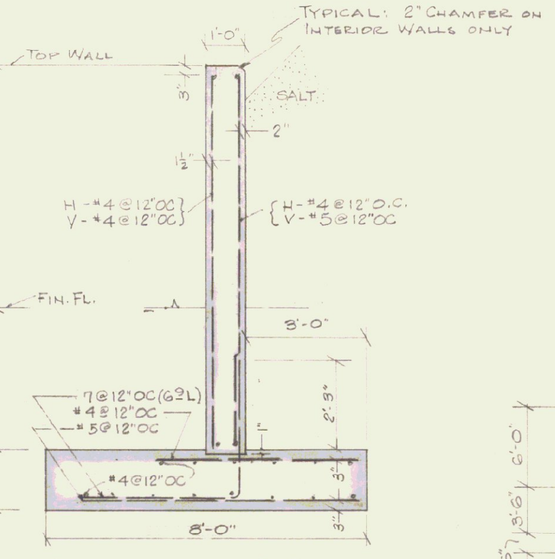

SECTION B-B
SCALE 3/8" = 1'-0"

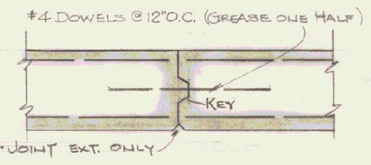

DETAIL OF CONSTRUCTION JOINT
SCALE 3/4" = 1'-0"

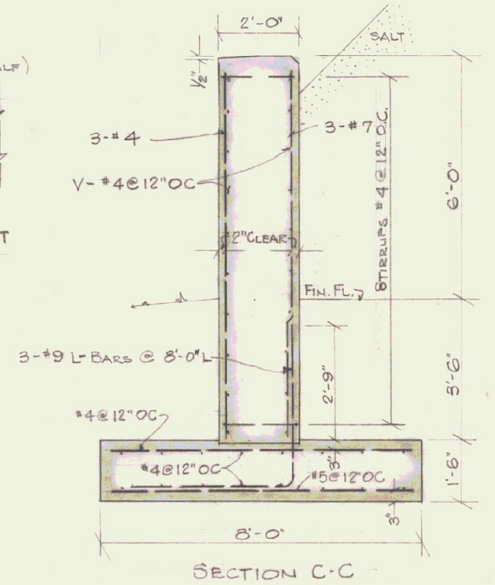

SECTION C-C
SCALE 3/8" = 1'-0"

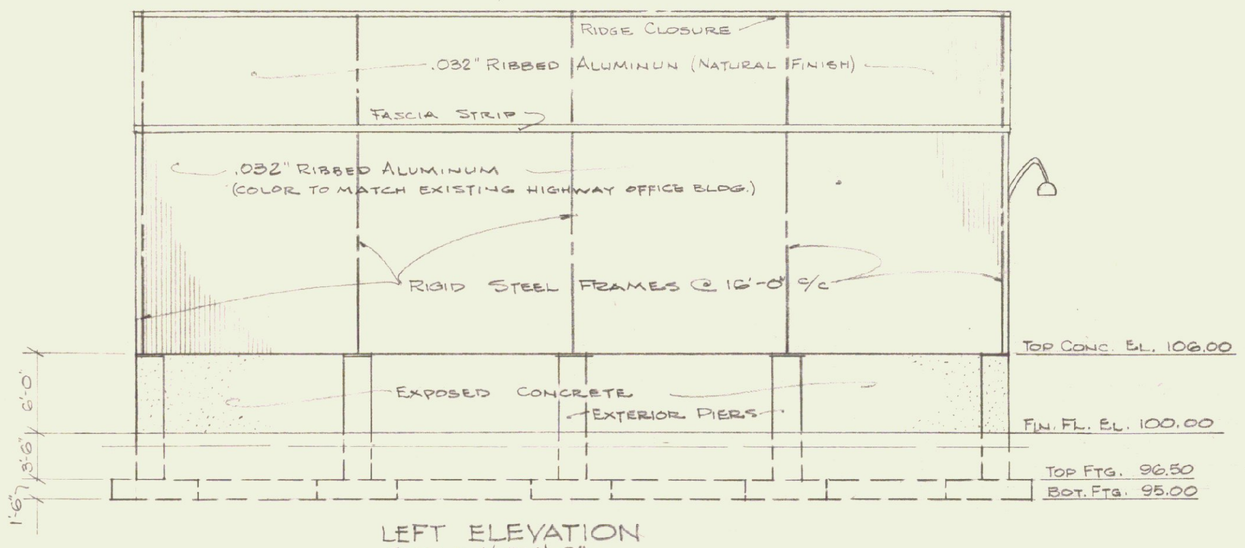

LEFT ELEVATION
SCALE 1/8" = 1'-0"
(RIGHT ELEVATION SIMILAR)

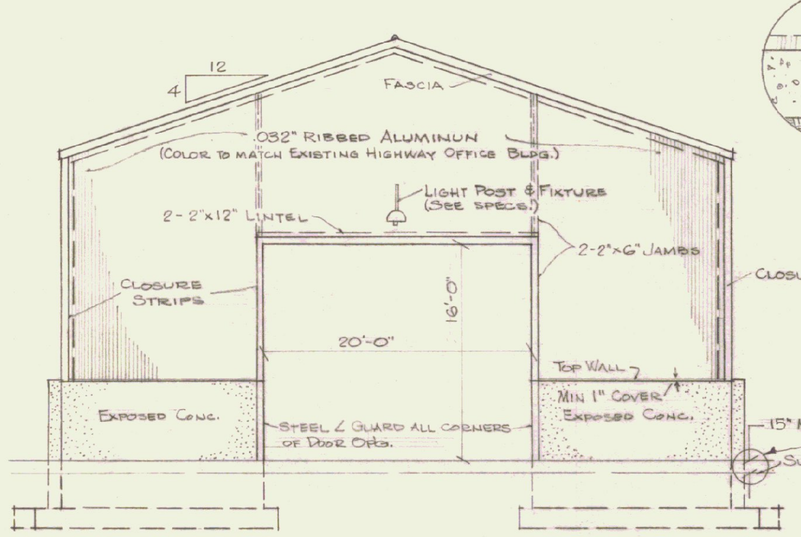

FRONT ELEVATION
SCALE 1/8" = 1'-0"

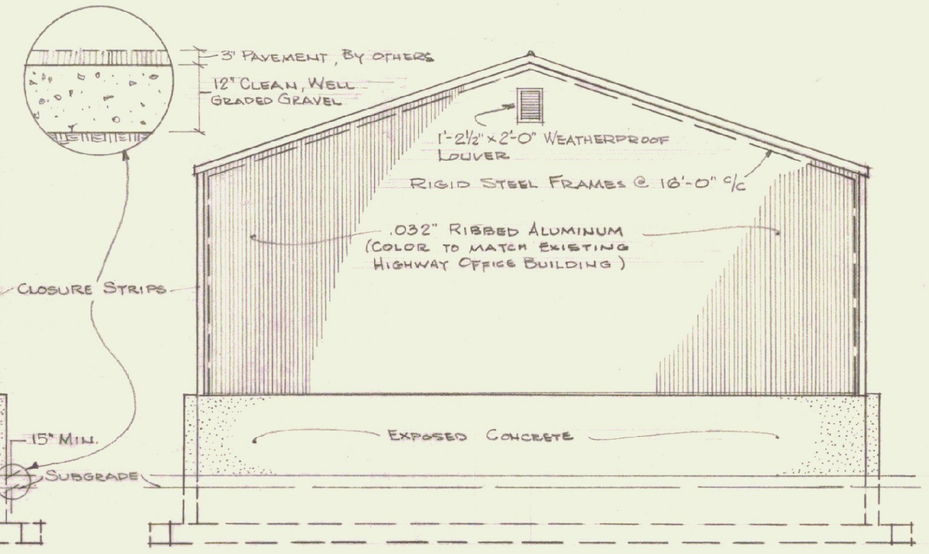

REAR ELEVATION
SCALE 1/8" = 1'-0"

GENERAL NOTES

1. SEE SITE PLAN S-1 FOR BUILDING LOCATION
2. SEE SITE PLAN S-1 FOR BURIED ELECTRICAL CONDUIT LOCATION.
3. CONCRETE: 3000 PSI @ 28 DAYS - MAXIMUM 4" SLUMP.
4. ALL EXPOSED CONCRETE SHALL BE RUBBED TO A SMOOTH UNIFORM FINISH.
5. ALL FRAMING LUMBER SHALL BE "CONSTRUCTION GRADE", $f = 1500$ PSI.
6. ALL BOLTS, & WASHERS FOR FOUNDATION SHALL BE GALVANIZED.

REVISIONS	
BY	DATE

STATE OF VERMONT
STATE BUILDINGS DIVISION
DEPARTMENT OF ADMINISTRATION
MONTPELIER, VERMONT

VERMONT HIGHWAY DEPARTMENT

STANDARD SALT STORAGE BUILDING
TYPE II

DATE: 1-21-74	DESIGNED BY: TJ SETTE	DWG. NO. 1
DRAWN BY: CEH	APPROVED BY:	1 OF 1