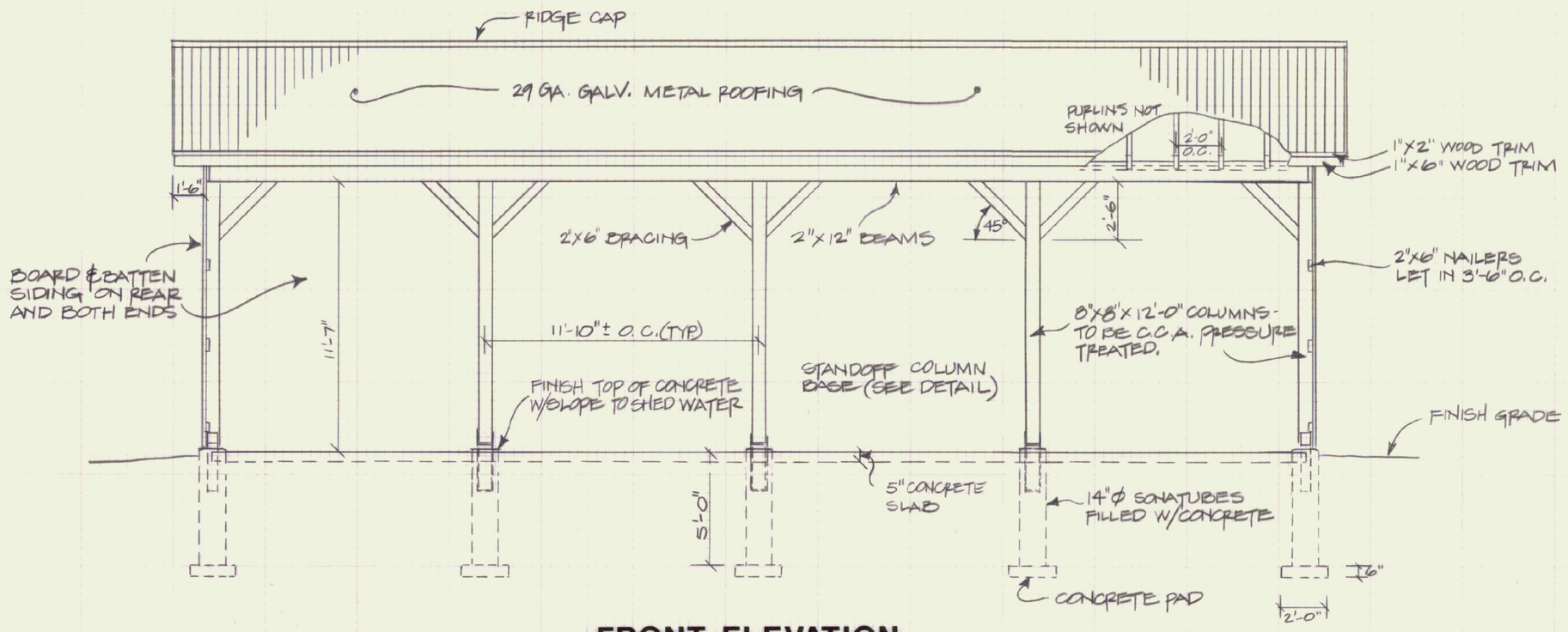

FRONT ELEVATION

SCALE: 1/4" = 1'-0"

60LB. SNOW LOAD PER 1991 BOCA CODE

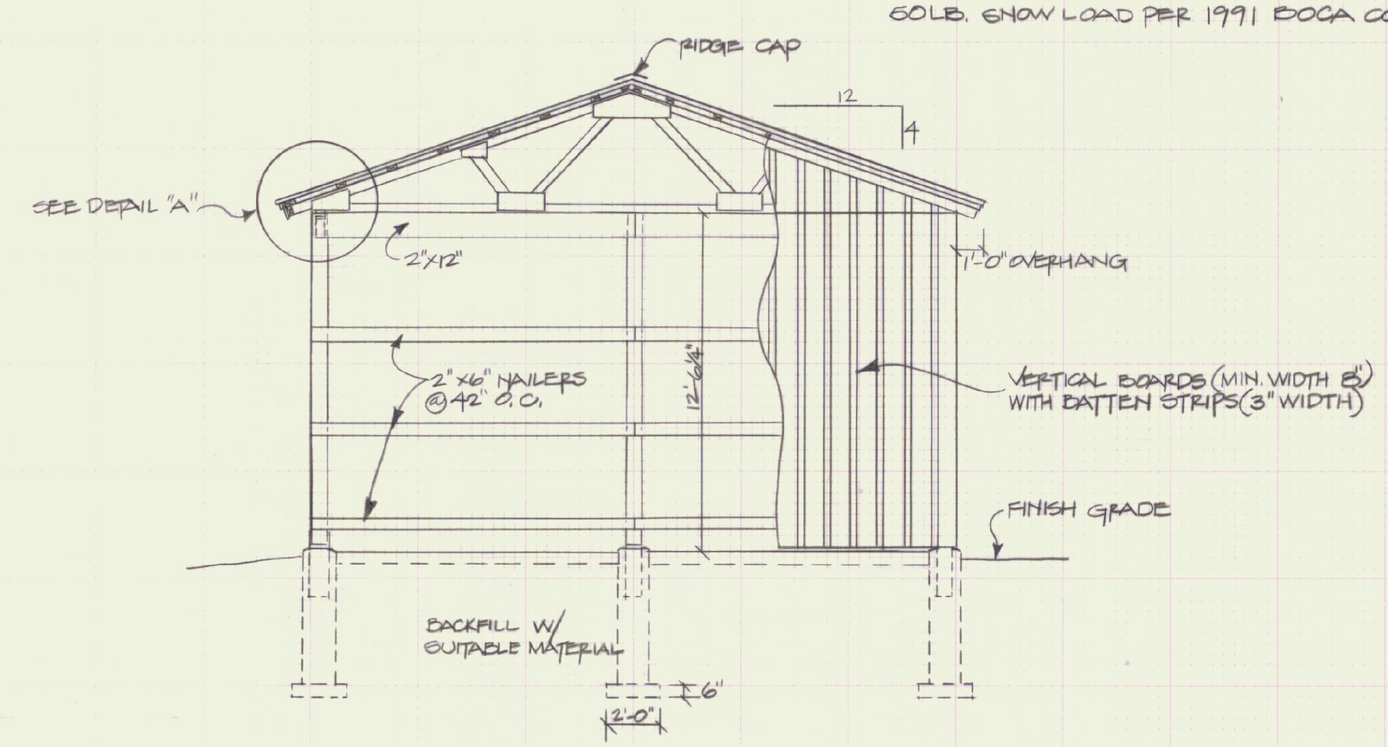

END ELEVATION

SCALE: 1/4" = 1'-0"

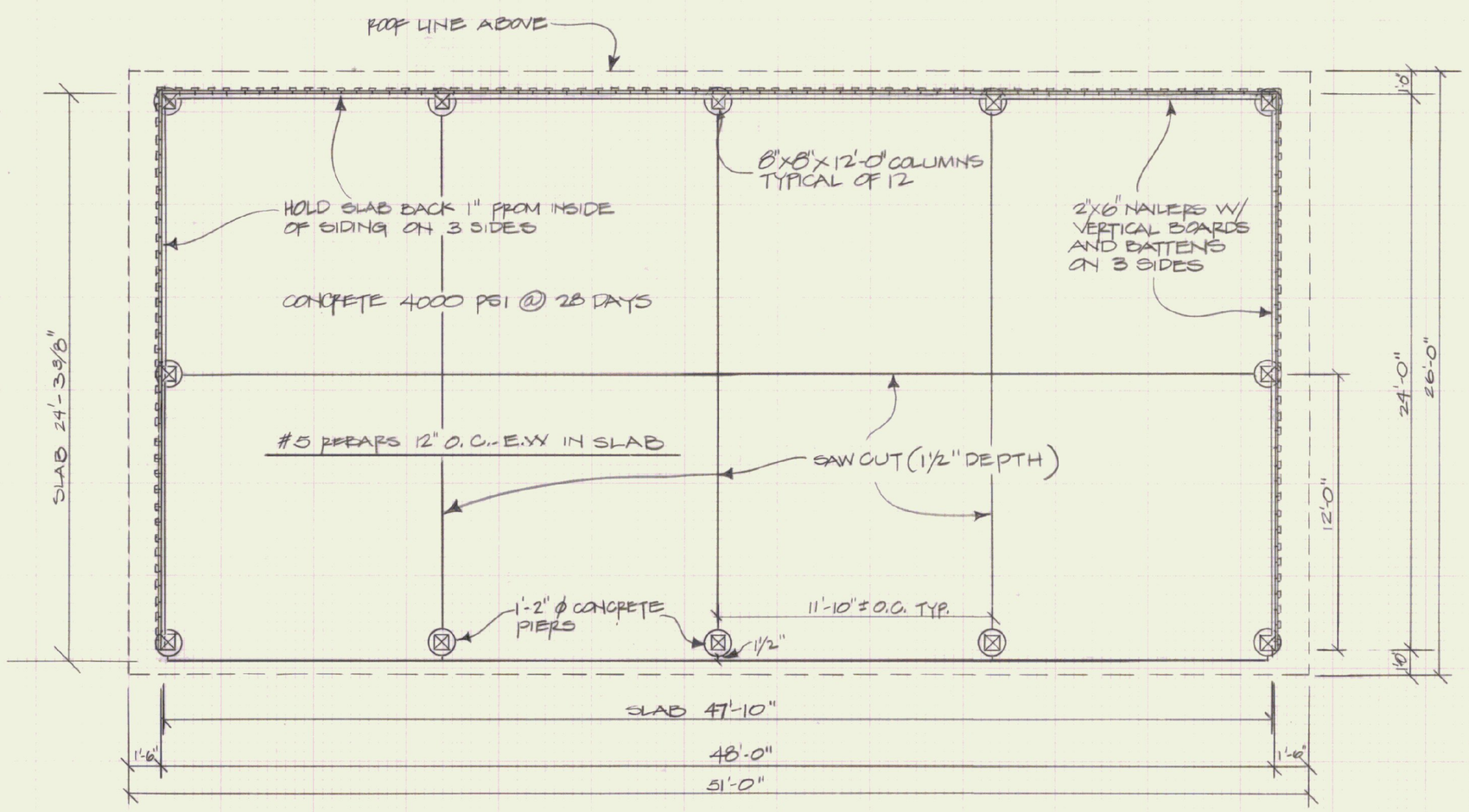

SHED PLAN

SCALE: 1/4" = 1'-0"

NOTE:
USE #5 REBARS @ 1'-0" O.C.-E.W. WITH 2" COVER.

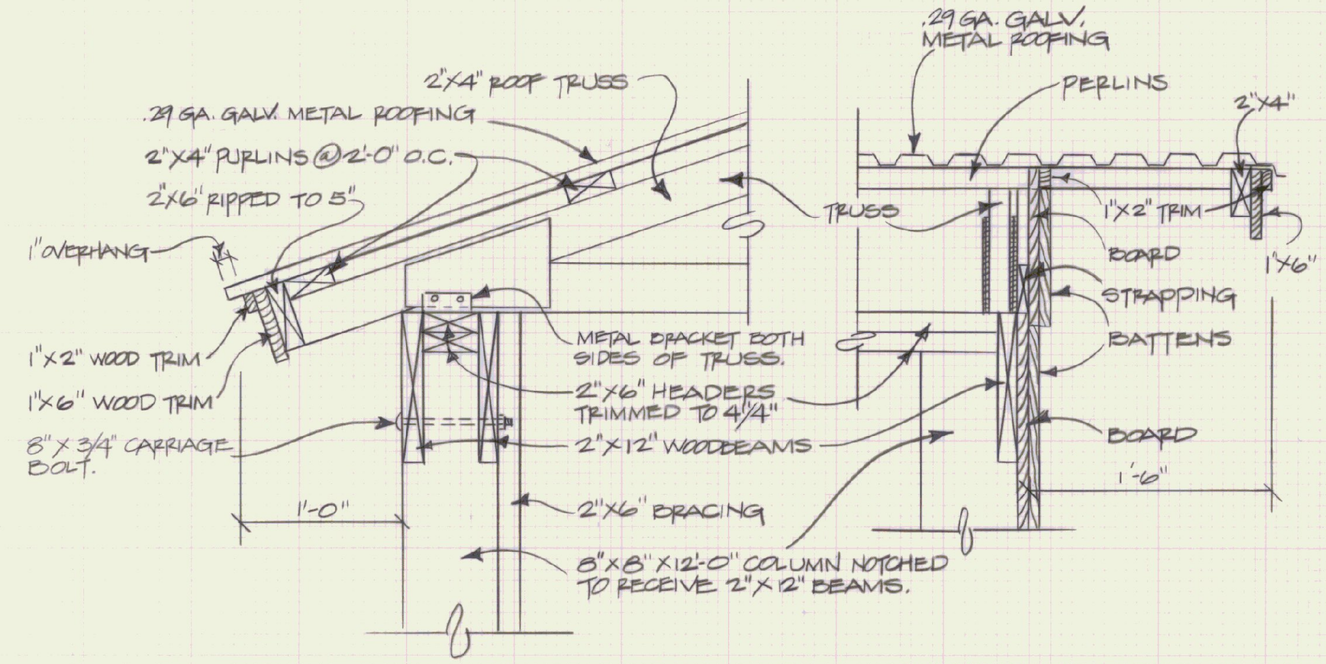

DETAIL "A"

SCALE: 1-1/2" = 1'-0"

RAKE DETAIL

SCALE: 1-1/2" = 1'-0"

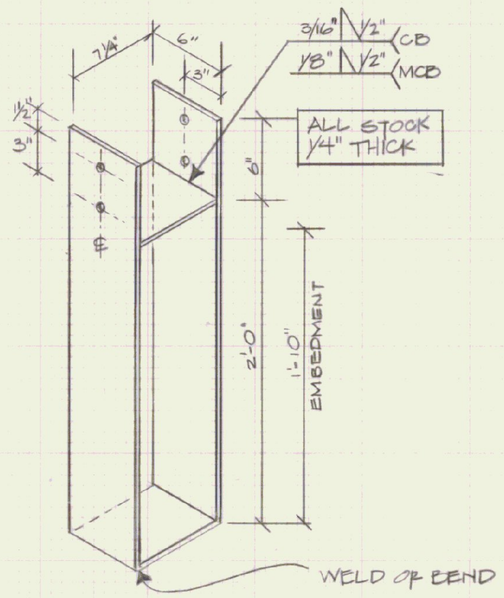

COLUMN BASE ANCHOR

SCALE: 1-1/2" = 1'-0"

STATE OF VERMONT
DEPARTMENT OF STATE BUILDINGS
AGENCY OF ADMINISTRATION
MONTPELIER, VERMONT

VERMONT AGENCY OF TRANSPORTATION

24' x 48' COLD STORAGE SHED WITH SLAB

DATE:	SCALE:	REVISIONS:	DWG. NO.
DEC. 2, 1991	AS NOTED		CSS 1
DRAWN BY: A. POULIN	APPROVED BY: F. PRATT		___ OF ___