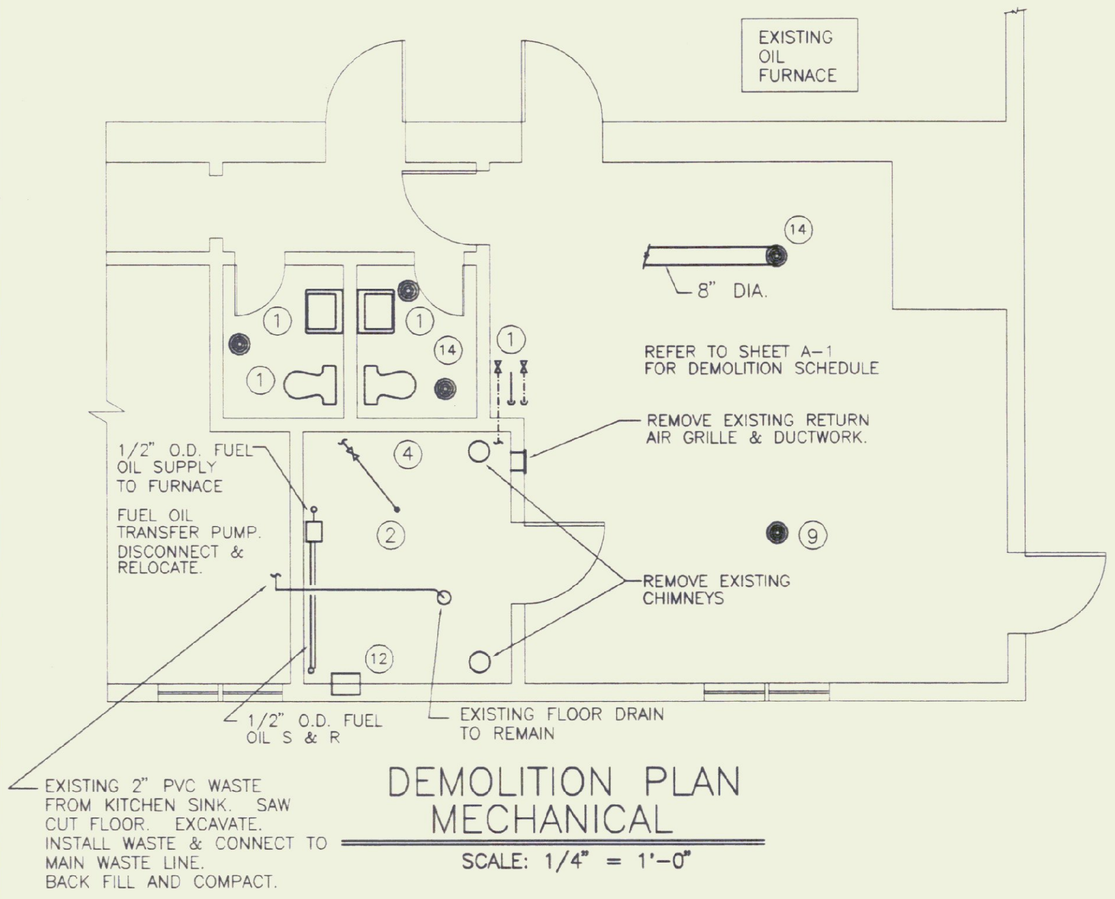

DEMOLITION PLAN MECHANICAL

SCALE: 1/4" = 1'-0"

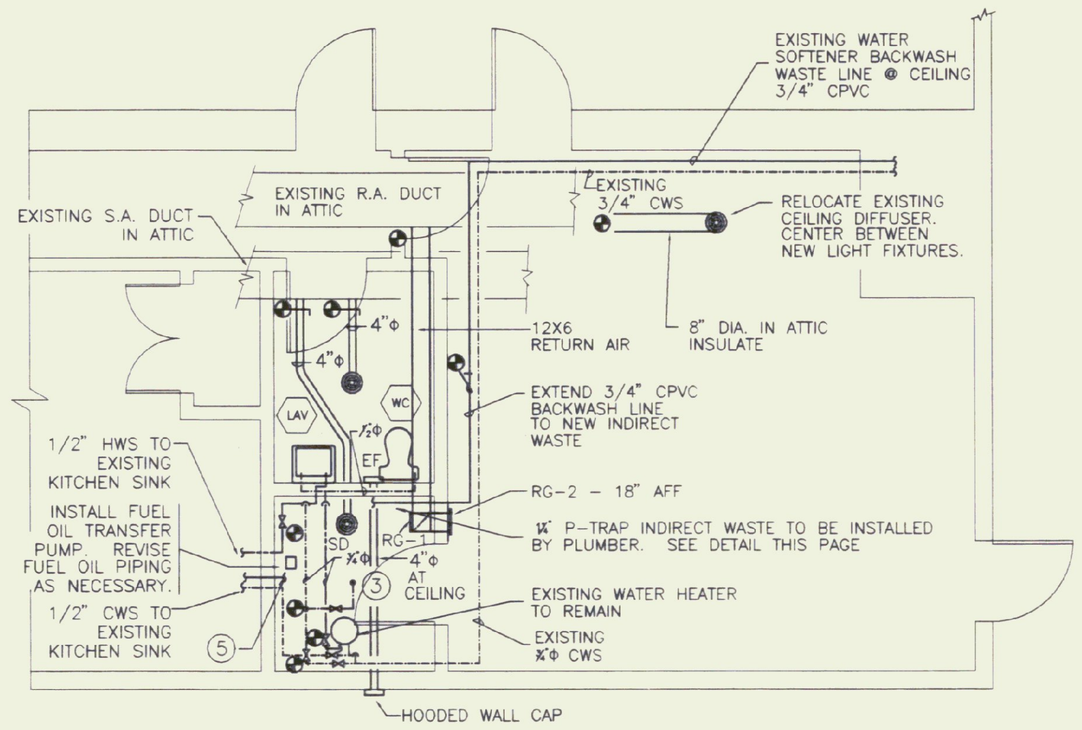

NEW MECHANICAL PLAN

SCALE: 1/4" = 1'-0"

LIGHTING FIXTURE SCHEDULE					
TYPE	MANUFACTURE & MODEL NUMBER	MOUNTING	LAMPS	VOLT	REMARKS
FA	KIM LIGHTING 1W/SAR3/50MH120/DB-P	WALL	50W ED-17 M.H.	120	REFER TO ARCHITECTURAL DRAWINGS FOR ELEVATION.
FB	COLUMBIA SATURN #SA140LA-EOCT-120	SURFACE	1 - T8 F032/35K	120	
FC	COLUMBIA CLASSIC WRAPAROUND #WC240A-EOCT-120	SURFACE	2 - T8 F032/35K	120	
FD	EXISTING FIXTURE TO REMAIN	SURFACE	PHILLIPS #SL-S17/35K	120	
FE	COLUMBIA PT240-EOCT 120	SURFACE	2 - T8 F032/35K	120	
	PRESCOLITE EDS2-NB	SURFACE	INCLUDED	120	
⊗	PRESCOLITE EXILED-R-EM	UNIVERSAL	LED	120	

LEGEND	
NEW FIXTURE	
EXISTING FIXTURE	
NEW/EXISTING WIRING	
EXISTING WIRING TO BE REMOVED	
FIXTURE SWITCH	$
3 WAY SWITCH	$3
SWITCH W/PILOT	$P
COLD WATER SUPPLY	
HOT WATER SUPPLY	
VENT PIPING	
WASTE PIPING	
CONNECT TO EXISTING	
GATE VALVE	
BALL VALVE	
WALL CLEANOUT	WCO
MECHANICAL CONTRACTOR	MC
ELECTRIC CONTRACTOR	EC

KEYED NOTES	
KEY	DESCRIPTION
1	REMOVE EXISTING FIXTURES SUPPLY, WASTE, AND VENT PIPING AND ALL ASSOCIATED PIPING. VALVE & CAP AS NECESSARY. LEGALLY DISPOSE OF ALL ITEMS REMOVED THAT WILL NOT BE INSTALLED FOR RENOVATION. REMOVE SUPPLY REGISTER & BRANCH DUCT. CAP & SEAL @ TAKE-OFF FROM MAIN DUCT.
2	REMOVE EXISTING SPRINKLER HEAD, BRANCH LINE, AND VALVE. REINSTALL AT NEW LOCATION.
3	NEW LOCATION FOR EXISTING SPRINKLER HEAD.
4	REMOVE ANY EXISTING PIPING ALONG WALL TO A POINT NOT TO INTERFERE WITH NEW WALL.
5	2" KITCHEN WASTE EXTEND & CONNECT TO EXISTING WASTE LINE IN FLOOR.
6	EXISTING LIGHTING FIXTURE TO REMAIN. NO WORK NECESSARY TO EXISTING LIGHTING FIXTURE.
7	EXISTING LIGHTING SWITCH(S) TO BE REMOVED. REPLACE WITH NEW LIGHTING SWITCH(S) AS SHOWN.
8	EXISTING ELECTRIC OUTLET TO REMAIN. NO WORK NECESSARY TO EXISTING ELECTRIC OUTLET.
9	EXISTING SUPPLY REGISTER TO REMAIN. NO WORK NECESSARY TO EXISTING SUPPLY REGISTER.
10	REMOVE FURNACE ELECTRIC CONTROLS. REMOVE OIL BURNER SWITCH. DOMESTIC WATER HEATER TO REMAIN.
11	REMOVE EXISTING ELEC. LIGHTING, OUTLETS ETC. AS REQUIRED FOR DEMOLITION.
12	REMOVE EXISTING DUCT, DAMPER AND LOUVER.
13	PROVIDE NEW 20A 1 POLE CIRCUIT BREAKER IN EXISTING ITE TYPE EQ LOAD CENTER.
14	REMOVE EXISTING CEILING SUPPLY REGISTER. REINSTALL IN NEW LOCATION.

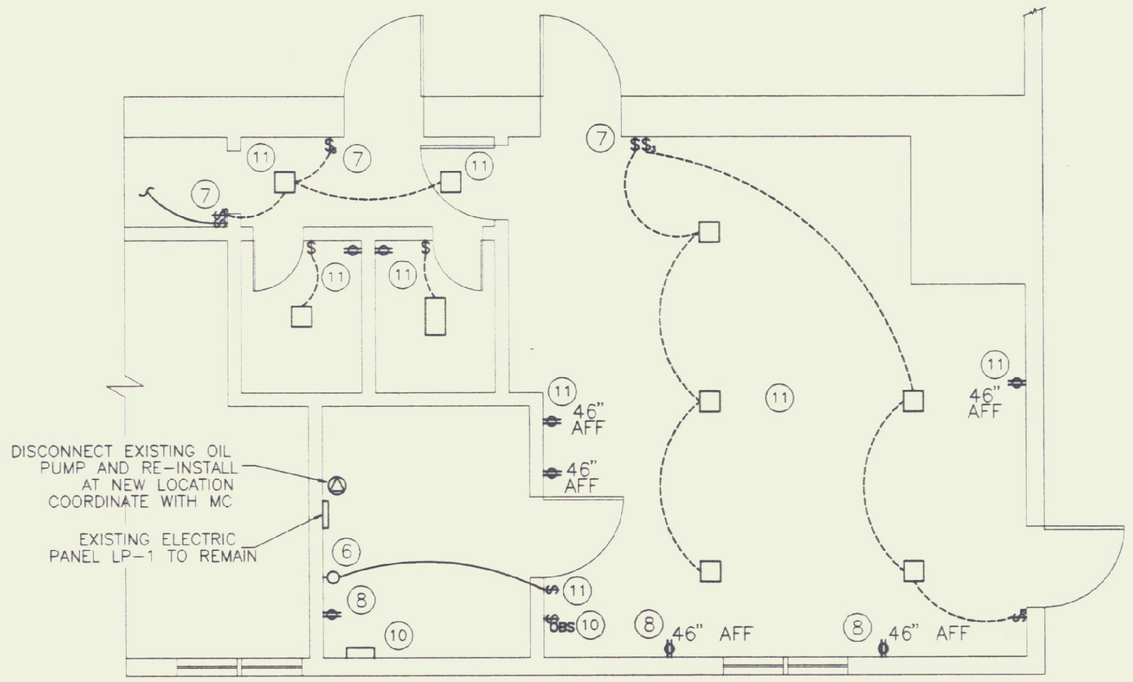

DEMOLITION PLAN ELECTRIC

SCALE: 1/4" = 1'-0"

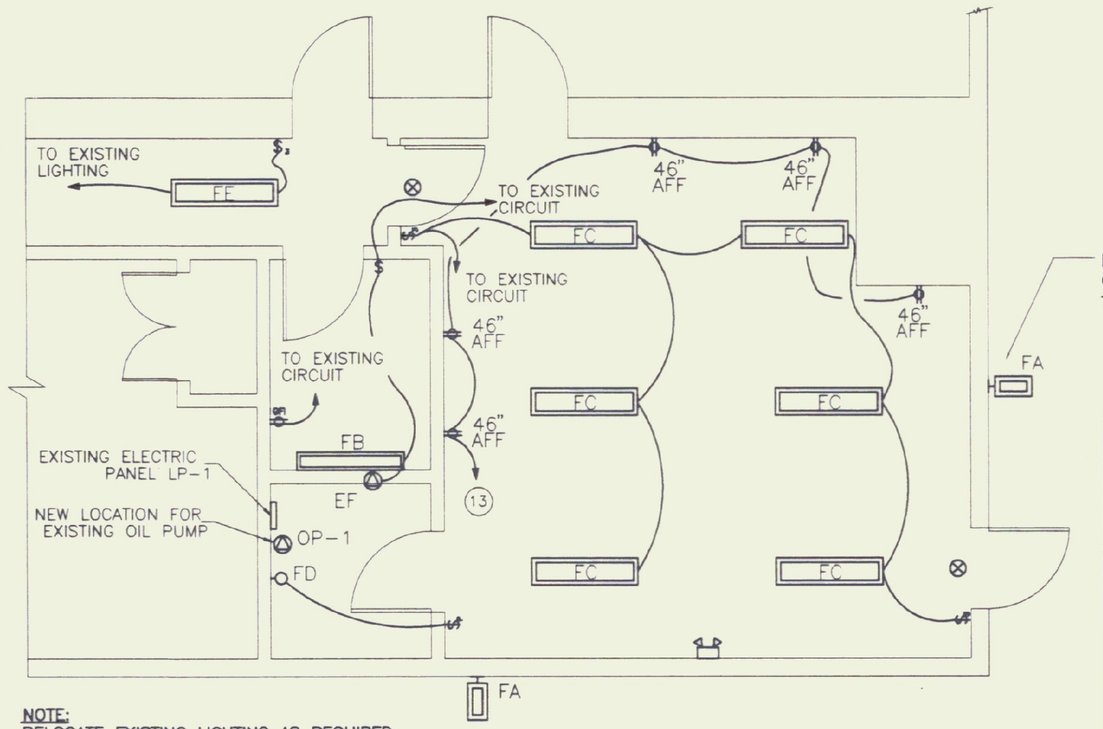

EXTERIOR LIGHTS (8 TOTAL) ON PHOTOCELL CONTROLLED CIRCUIT WITH 20 AMP LIGHTING CONTACTOR. REFER TO ARCHITECTURAL ELEVATIONS FOR LOCATIONS.

NOTE:
RELOCATE EXISTING LIGHTING AS REQUIRED FOR NEW ENTRANCE LOCATION. PROVIDE EXIT LIGHT AND EMERGENCY LIGHT AT NEW ENTRY. SEE ARCHITECTURAL FOR EXACT LOCATION.

NEW ELECTRIC PLAN

SCALE: 1/4" = 1'-0"

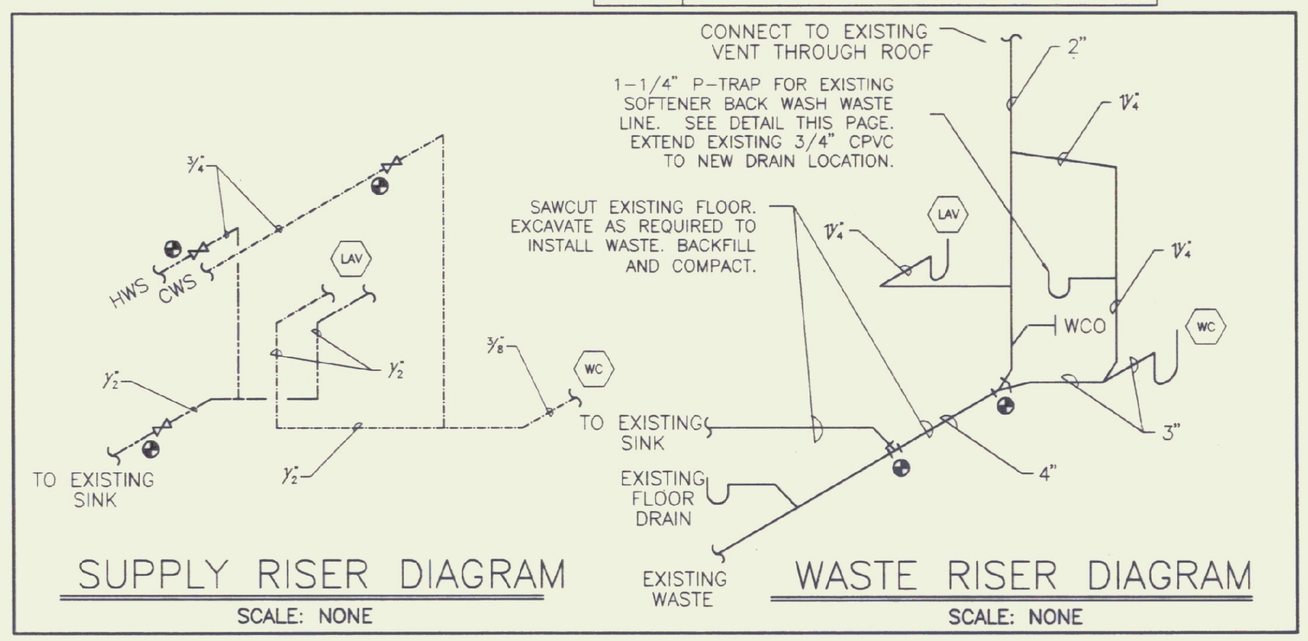

SUPPLY RISER DIAGRAM

SCALE: NONE

WASTE RISER DIAGRAM

SCALE: NONE

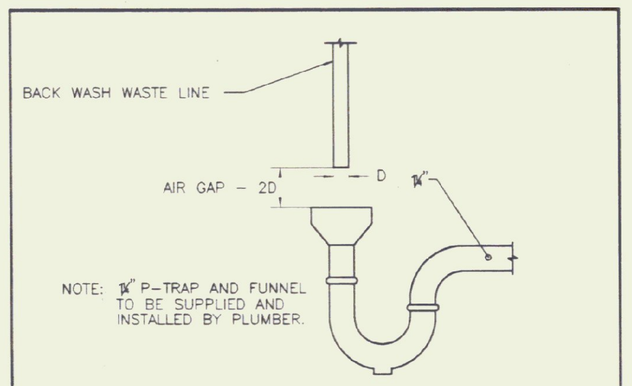

BACK WASH INDIRECT WASTE

SCALE: NONE

PLUMBING FIXTURE SCHEDULE							
ITEM	MANUFACTURE & MODEL NUMBER	TRIM & ACCESSORIES	CONNECTIONS				REMARKS
			WASTE	VENT	CWS	HWS	
LAV	AMERICAN STANDARD "REGALYN" LAVATORY CAT. NO. 4869.020 4" CENTERS	AMERICAN STANDARD FAUCET MODEL 2385.130 SUPPLIES WITH STOP 1¼" TRAP WADE W-400 CARRIER	1¼"	1¼"	½"	½"	1, 2
WC	AMERICAN STANDARD "CADET" WATER CLOSET #2108.700	SEAT - OLSONITE #95 OPEN FRONT LESS COVER	3"	2"	⅜"		1

1. WHITE FIXTURE
2. OFFSET P-TRAP AND INSULATE ALL EXPOSED PIPING.

MECHANICAL EQUIPMENT SCHEDULE	
ITEM	DESCRIPTION
EF	EXHAUST FAN WITH WALL DISCHARGE HOOD, 50 CFM, 1.5 SONES, 4" DIA. RIGID DUCT, BROAN MODEL NO. 670 WITH HOODED WALL CAP NO. 642.
OP-1	EXISTING OIL PUMP TO BE INSTALLED AT NEW LOCATION.
RG-1	RETURN GRILLE, 10X4, METALAIRE TYPE RH. 18" AFF.
RG-2	RETURN GRILLE, 10X10, METALAIRE TYPE RH.
SD	SUPPLY DIFFUSER, 6" ROUND, METAL INDUSTRIES 900 W/ 900D.

0 1 2 4 8 16

GRAPHIC SCALE - FEET

STATE OF VERMONT
DEPARTMENT OF STATE BUILDINGS
AGENCY OF ADMINISTRATION
MONTPELIER VERMONT

FRANKLIN COUNTY AIRPORT ADA BATHROOM RENOVATIONS

Route 78, Swanton, Vermont

BATHROOM RENOVATIONS

STATE OF VERMONT — EDWARD E. PEARSON — No. 5107 — REGISTERED PROFESSIONAL ENGINEER

Pearson & Associates
MECHANICAL & ELECTRICAL ENGINEERS
P.O. BOX 610 STOWE, VERMONT 05672
TEL. (802) 253-9607 FAX. (802) 253-9290

DUNCAN◦ WISNIEWSKI ARCHITECTURE ▪
207 King Street, Burlington, Vermont 05401 (802)864-6693

DATE: 5/22/95	SCALE: AS NOTED	REVISIONS:	CADD FILE: 94107ME1	DWG NO.
DRAWN BY: R.M.G.	APPROVED BY:		SHEET: 1 OF 1	ME-1