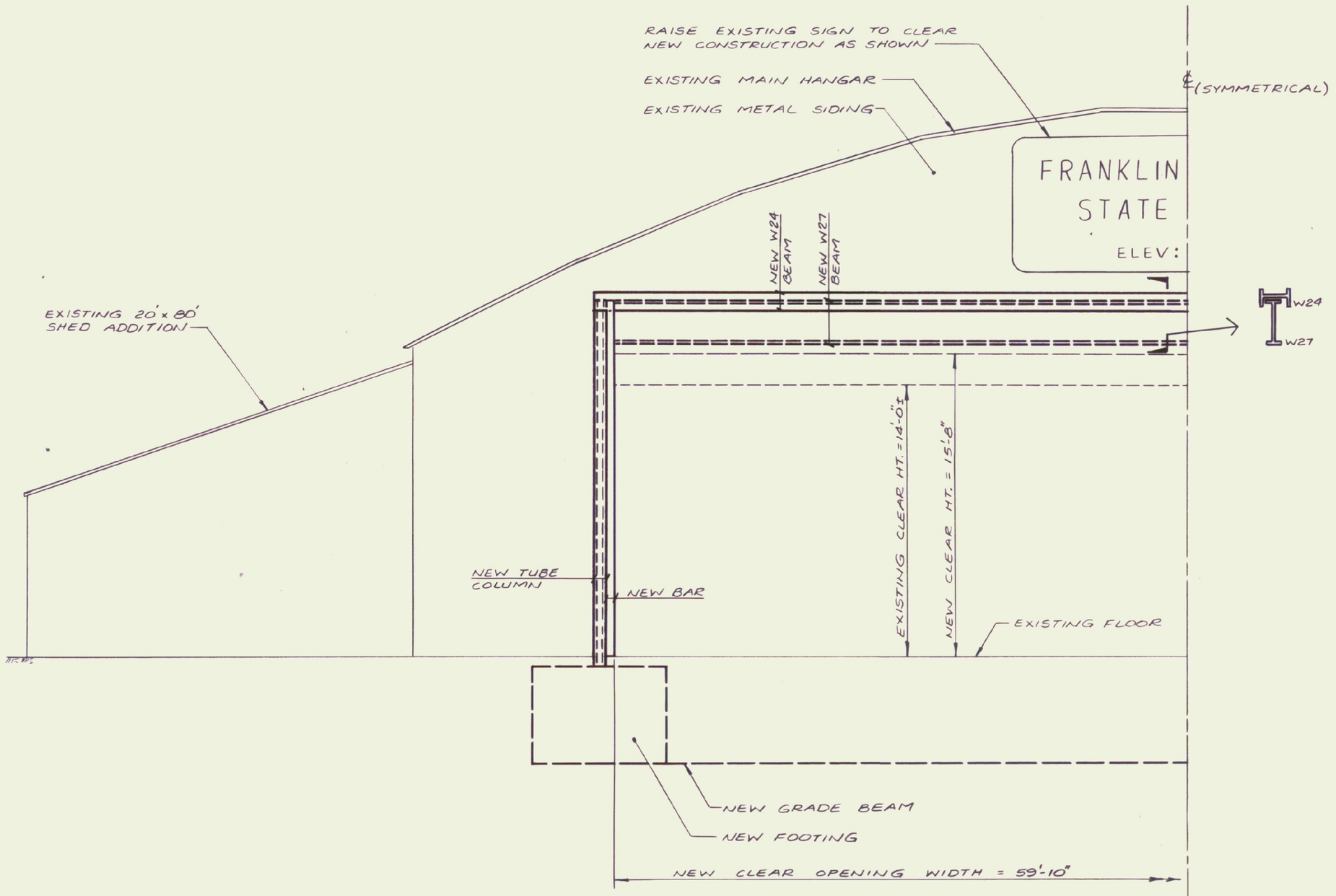

PARTIAL ELEVATION (WEST WALL)
SCALE: 1/4" = 1'-0"

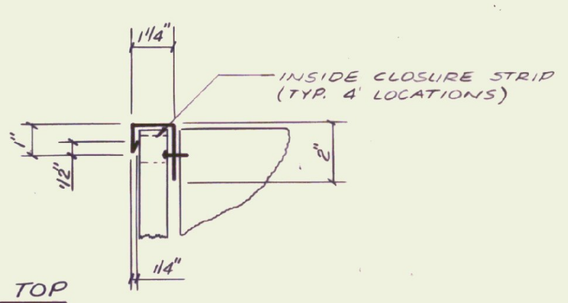

DOOR TOP

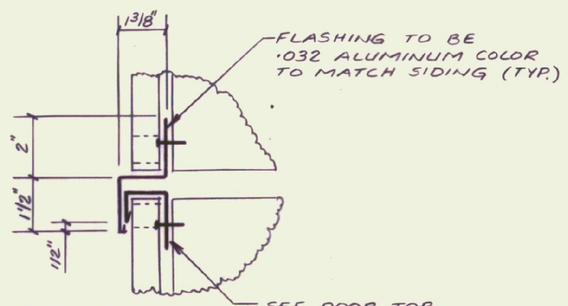

DOOR MID-POINT

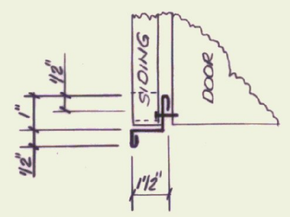

DOOR BOTTOM

BI-FOLD DOOR FLASHING DETAILS
SCALE: 3" = 1'-0"

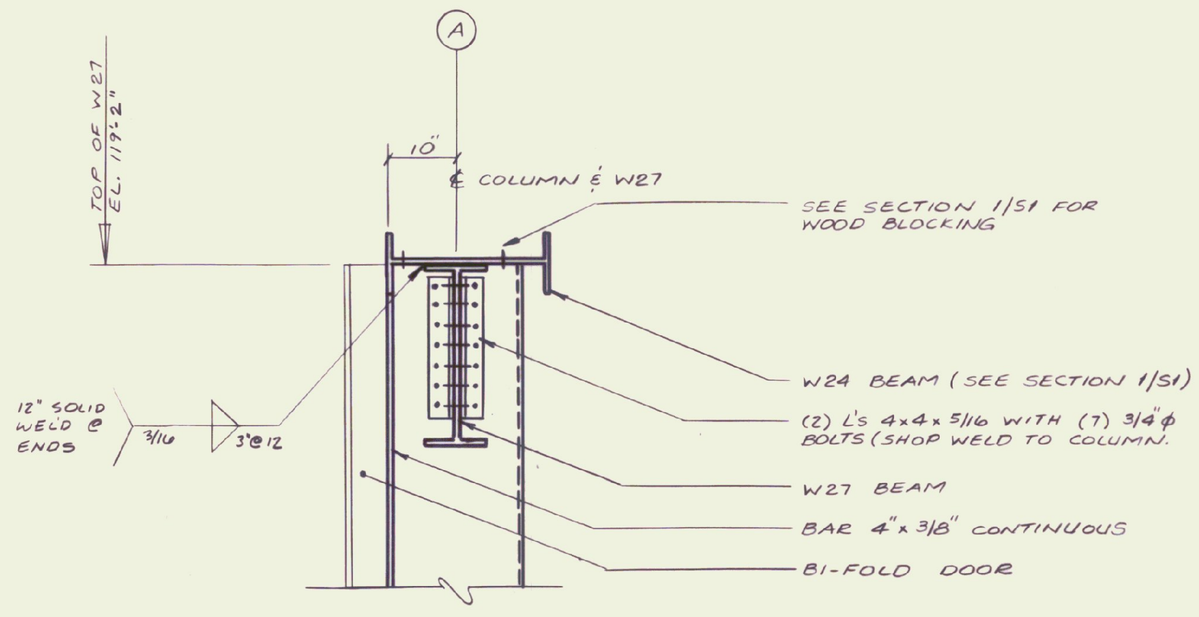

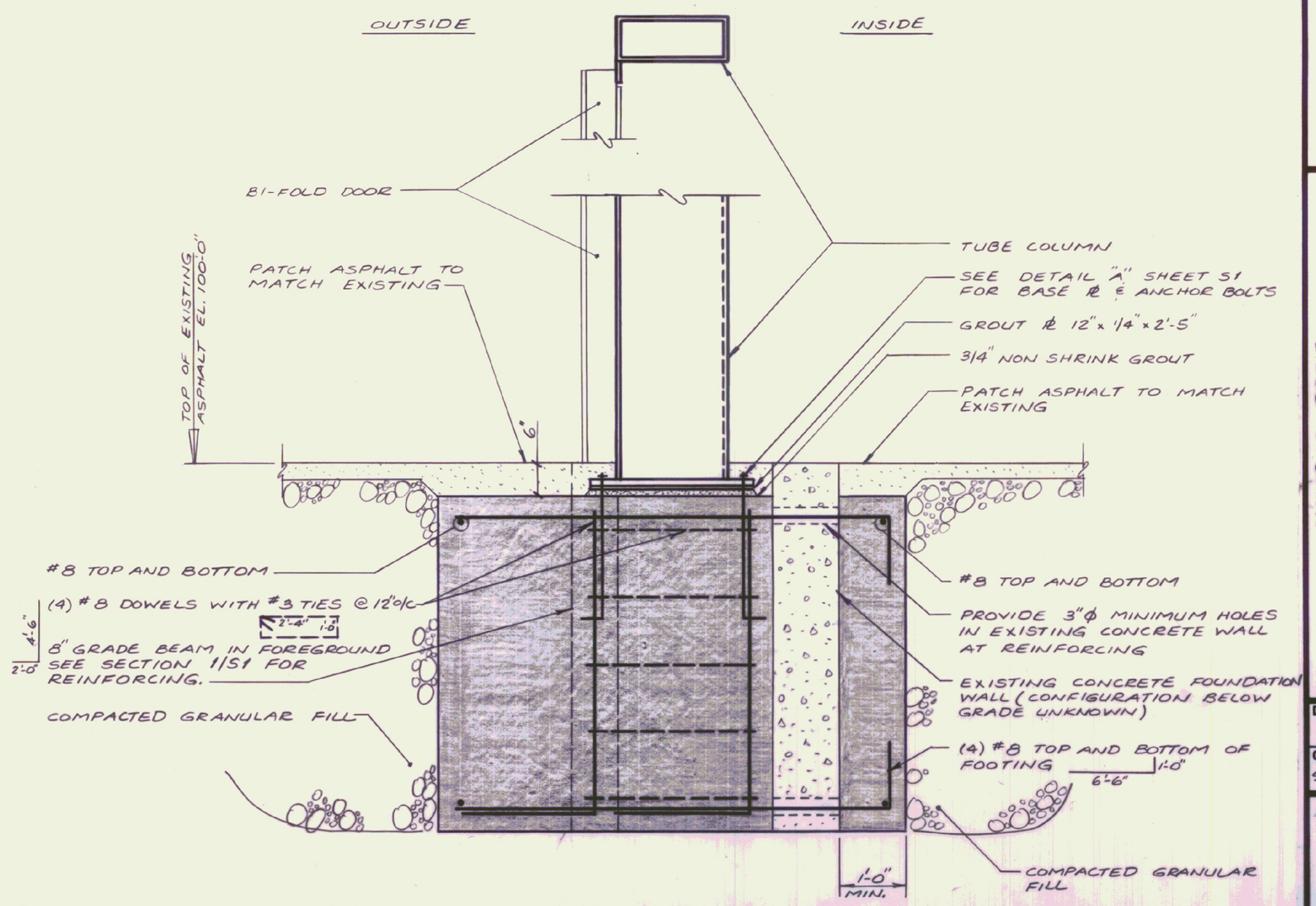

SECTION 2/S2
SCALE: 3/4" = 1'-0"

STATE OF VERMONT
STEPHEN K. COLLINS
NO. 5133
REGISTERED PROFESSIONAL ENGINEER

No.	DATE	REVISION
1	4-29-87	NO CHANGES

Lawes Consulting Engineers, Inc.
ROUTE 2A WILLISTON, VERMONT 05495

HANGAR DOOR
FRANKLIN COUNTY STATE AIRPORT
HIGHGATE, VERMONT

ELEVATIONS AND SECTIONS

DRAWN	PROJ. No.
SOMA	86114
CHECKED	DATE
SKC/CWL	1/26/87

S2