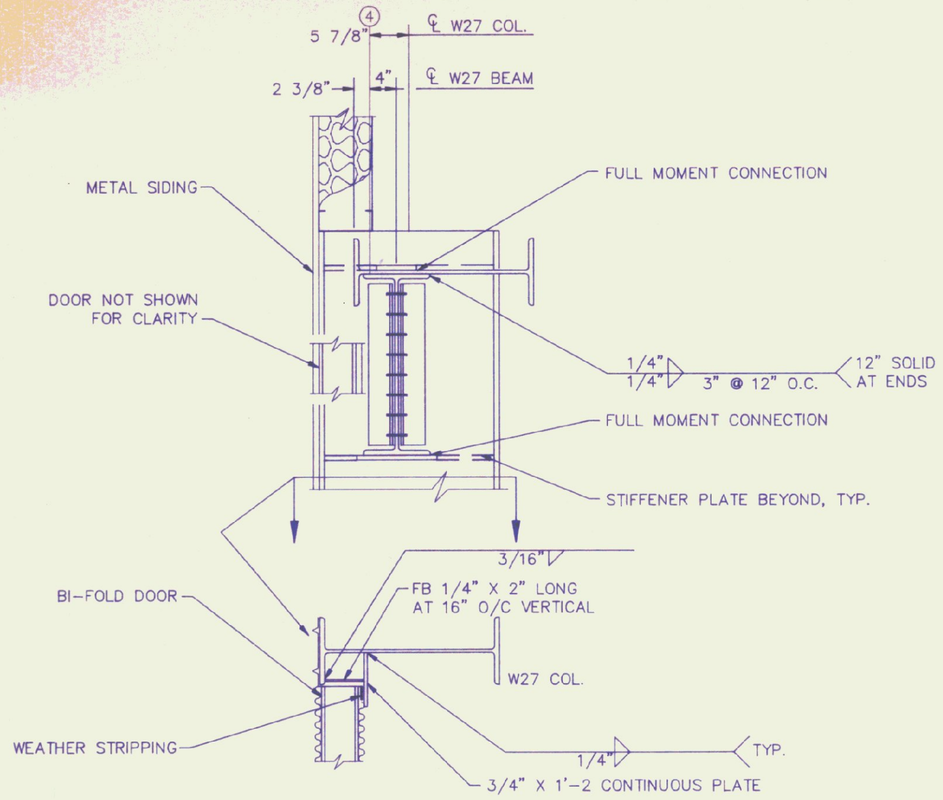

JAMB

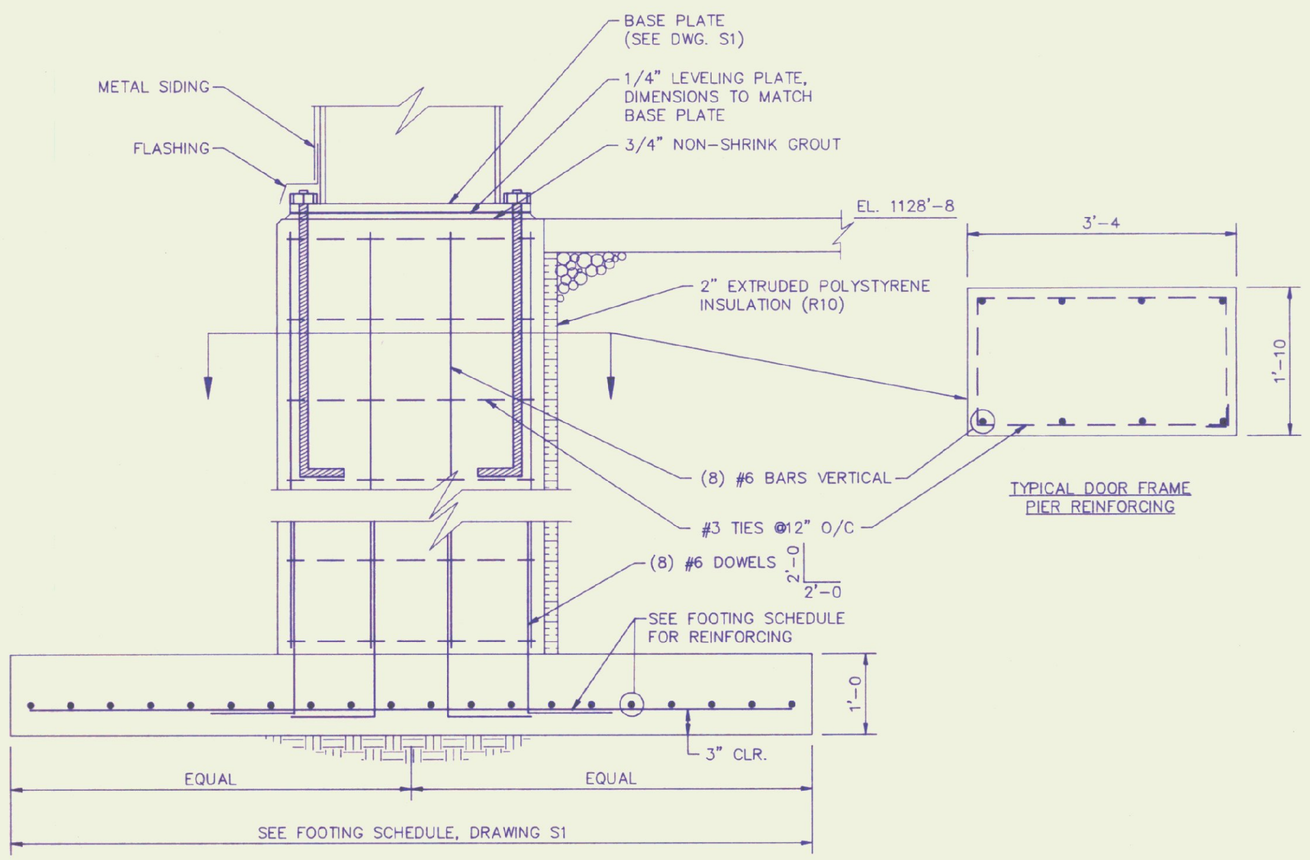

TYPICAL DOOR FRAME PIER REINFORCING

SECTION 17/S1

SCALE: 3/4"=1'-0

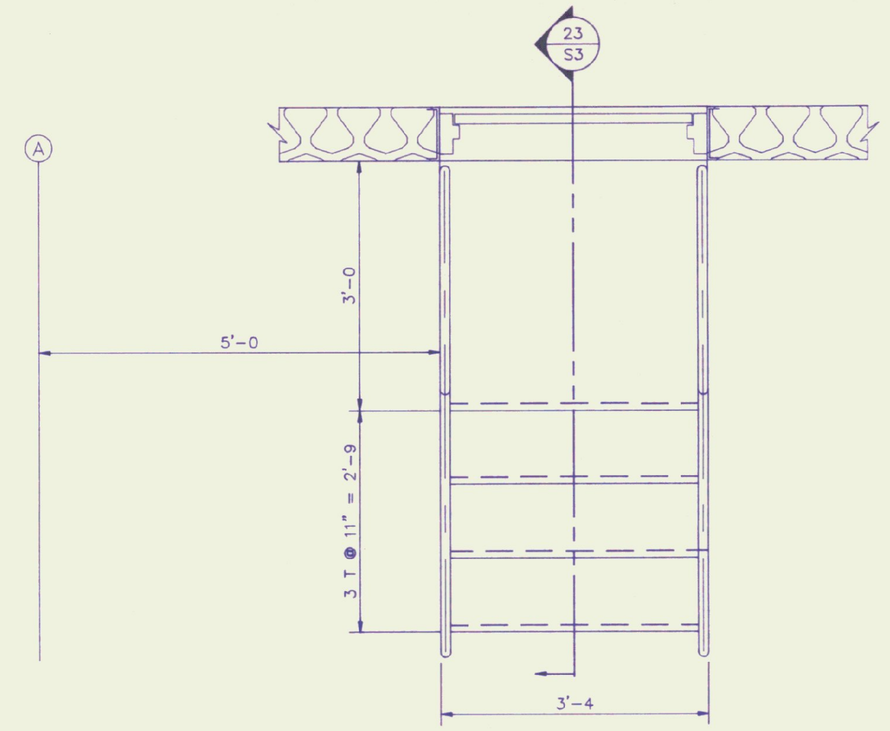

DETAIL STAIR PLAN 22/S3

SCALE: NONE

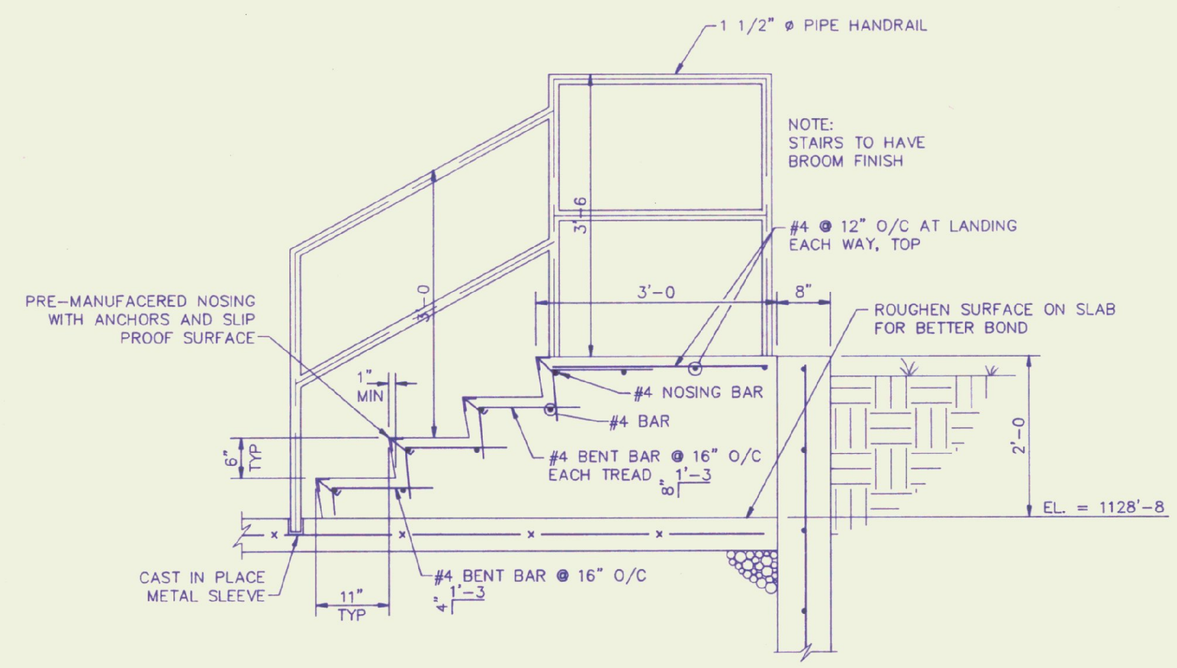

SECTION THROUGH STAIRS 23/S3

SCALE: NONE

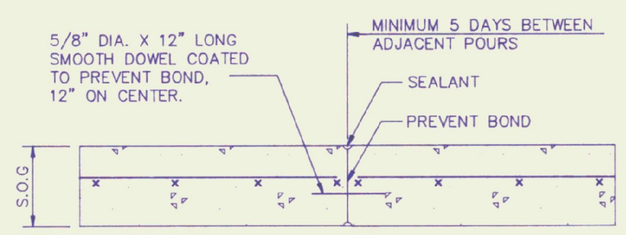

SLAB CONSTRUCTION JOINT

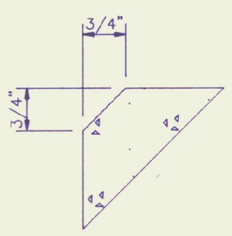

DETAIL TYPICAL CHAMFER 19/S3

SCALE: NONE

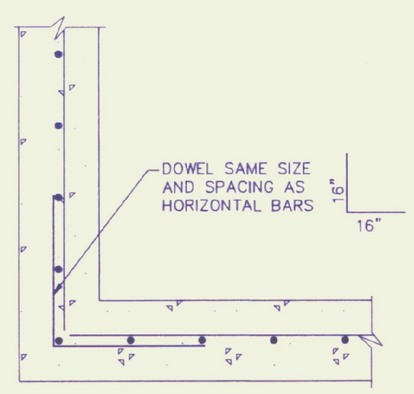

DETAIL TYPICAL CORNER REINFORCING 20/S3

SCALE: NONE

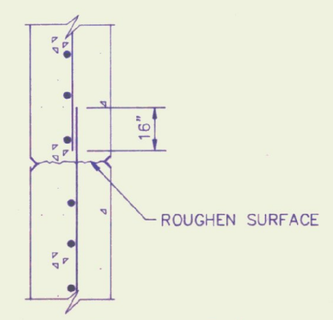

WALL CONSTRUCTION JOINT

DETAIL TYPICAL CONSTRUCTION JOINTS 21/S3

SCALE: NONE

STRUCTURAL NOTES

1. THE STRUCTURAL DRAWINGS SHALL BE USED IN CONJUNCTION WITH THE SITE, ARCHITECTURAL, MECHANICAL, ELECTRICAL AND PLUMBING DRAWINGS AND THE SPECIFICATIONS.

2. STEEL MATERIALS SHALL CONFORM TO THE FOLLOWING:

   STRUCTURAL SHAPES
   ASTM A36, Fy = 36,000 PSI

   BOLTS
   ASTM A325

3. ALL WELDING SHALL CONFORM TO THE "STRUCTURAL WELDING CODE - ANSI/AWS D1.1" OF THE AMERICAN WELDING SOCIETY.

4. ALL SHOP CONNECTIONS SHALL BE BOLTED OR WELDED. ALL FIELD CONNECTIONS SHALL BE BOLTED EXCEPT WHERE WELDING IS SPECIFICALLY CALLED FOR. BOLTS SHALL BE 3/4 INCH DIA. MINIMUM, FORM HOLES 1/16 INCH LARGER, EXCEPT FOR COLUMN GROUT LEVELER PLATES WHICH ARE 3/16" LARGER, AND COLUMN BASE PLATES, WHICH ARE 1/8" LARGER. CONNECTIONS NOT DETAILED SHALL BE DESIGNED FOR THE LOADS INDICATED ON THE DRAWINGS OR THOSE GIVEN IN THE AISC UNIFORM LOAD TABLES (PO. 2-20 -> 2-43), WHICHEVER IS GREATER. THE STRUCTURAL STEEL FABRICATOR IS RESPONSIBLE FOR THE DESIGN OF ALL CONNECTIONS.

5. ALL STRUCTURAL STEEL SHALL BE SHOP PAINTED (MINIMUM 2 MILS DRY FILM THICKNESS) WITH AN APPROVED RUST INHIBITIVE PRIME PAINT. STEEL SHALL BE THOROUGHLY CLEANED PRIOR TO PAINTING. THE CONTRACTOR SHOULD HAVE AVAILABLE, THE EXACT SAME PAINT FOR FIELD TOUCH UP.

6. THERE WILL BE NO FIELD BURNING, CUTTING, OR OTHER ALTERATIONS OF STRUCTURAL STEEL WITHOUT THE WRITTEN PERMISSION OF THE ENGINEER.

7. ALL ROOF DECKING SHALL BE INSTALLED IN STRICT ACCORDANCE WITH THE MANUFACTURER'S SPECIFICATIONS, THE STEEL DECK INSTITUTE (S.D.I.), FACTORY MUTUAL REQUIREMENTS, AND THE AMERICAN IRON AND STEEL INSTITUTE.

8. EDGES OF ALL DECKING SHALL BE PROPERLY SUPPORTED. OPENINGS IN THE DECK EQUAL TO OR SMALLER THAN 8" IN DIAMETER SQUARE SHALL HAVE A 20" SQUARE X 12GA SHEET WELDED OR SCREWED TO THE TOP OF THE DECK TO SUPPORT THE OPENING. FOR OPENINGS LARGER THAN THE ABOVE, USE AN L 4X4X1/4 FRAME (BEARING OR STRUCTURAL MEMBERS) UNLESS OTHERWISE NOTED ON PLANS.

9. THE STRUCTURAL STEEL ERECTOR SHALL PROVIDE ALL NECESSARY BRACING, CABLES, GUYING, & SHORING REQUIRED TO ERECT AND HOLD THE STEEL FRAME PLUMB AND SQUARE UNTIL ALL OTHER STRUCTURAL COMPONENTS ARE INSTALLED. THE BRACING SHOULD BE DESIGNED TO SUSTAIN ANY WIND LOADS.

10. THE CONTRACTOR SHALL SUBMIT SHOP DRAWINGS (ONE REPRODUCIBLE PRINT AND FOUR BLUE PRINTS) TO THE ENGINEER FOR REVIEW PRIOR TO FABRICATION FOR THE FOLLOWING ITEMS:

    REINFORCING STEEL
    STRUCTURAL STEEL
    ROOF DECKING
    PRE-ENGINEERED BUILDING COMPONENTS
    METAL SIDING

    IT IS REQUIRED THAT THE STRUCTURAL STEEL SUBCONTRACTOR PREPARE COMPLETE ERECTION DRAWINGS. REVISING OR PHOTOCOPYING OF THESE STRUCTURAL DRAWINGS WILL NOT BE PERMITTED WITHOUT PERMISSION OF THE ENGINEER. OTHER SHOP DRAWINGS NOT ASKED FOR ON PLANS BUT ASKED FOR IN SPECIFICATIONS ARE STILL REQUIRED FOR SUBMITTAL.

11. DESIGN LOADS:

ROOF		FLOOR
SNOW LOAD	= 50 PSF	LIVE LOAD = 150 PSF
DEAD LOAD	= 15 PSF	
TOTAL	= 65 PSF	

BASIC WIND SPEED = 90 MPH
EARTHQUAKE ZONE = (2)

EACH PRE-ENGINEERED BUILDING FRAME TO BE DESIGNED TO SUPPORT (2) 400 LB. CONCENTRATED LOADS FOR UNIT HEATERS.

CONCRETE NOTES

1. ALL CONCRETE DRAWINGS ARE TO BE USED IN CONJUNCTION WITH ALL OTHER PROJECT DRAWINGS SUCH AS SITE, ARCHITECTURAL, ELECTRICAL AND MECHANICAL AND ANY SPECIFICATIONS ISSUED BY THE OWNER, ENGINEER, ARCHITECT, OR MANUFACTURER.

2. CONCRETE USED ON THE PROJECT SHALL BE NORMAL WEIGHT AND MEET THE REQUIREMENTS OF THE SPECIFICATIONS.

3. CONCRETE SHALL BE DESIGNED, MIXED, HANDLED, PLACED, CURED, ETC. ACCORDING TO RECOMMENDATIONS AND SPECIFICATIONS FOUND IN LOCAL CODES AND IN THE LATEST RECOMMENDATIONS OF THE AMERICAN CONCRETE INSTITUTE (ACI).

4. REINFORCING STEEL TO MEET ALL THE REQUIREMENTS OF ASTM 615, GRADE 60. WELDED WIRE FABRIC TO MEET REQUIREMENTS OF ASTM A185.

5. REINFORCING STEEL SHALL BE SECURELY TIED AND HELD IN PROPER PLACE BEFORE AND MAINTAINED DURING THE POUR BY MEANS OF APPROVED CHAIRS AND SPACERS. USE PLASTIC TIPPED ACCESSORIES FOR CONCRETE EXPOSURE TO WEATHER, WATER, OR VIEW.

6. LAP ALL BARS 30 BAR DIAMETERS UNLESS OTHERWISE SPECIFIED ON THE DRAWINGS. WELDED WIRE FABRIC IS LAPPED ONE FULL MESH AT SIDES AND AT ENDS. WHERE CONTINUOUS BARS ARE REQUIRED, RUN BARS CONTINUOUSLY AROUND CORNERS, DOWELLED INTO ANY INTERSECTING WALLS, AND LAPPED AT SPLICES AS NOTED ABOVE. ALL SPLICES ARE TO BE STAGGERED IF POSSIBLE.

7. CONCRETE SHALL COVER THE REINFORCING STEEL PER FOLLOWING TABLE, DIMENSIONS GIVEN ARE CLEAR DIMENSIONS:

CONCRETE POURED AGAINST SOIL	3 INCHES
FORMED CONCRETE AGAINST SOIL	
#5 BARS AND SMALLER	1 1/2 INCHES
#6 BARS AND LARGER	2 INCHES
CONCRETE NOT EXPOSED TO EARTH OR WEATHER	
BEAMS AND COLUMNS	3/4 INCH
SLABS, WALLS, AND JOISTS	1 1/2 INCHES

8. FOOTINGS ARE TO BE PLACED ON UNDISTURBED SOIL OR COMPACTED STRUCTURAL FILL. USE THE ELEVATIONS AS SHOWN ON THE PLANS. THESE ELEVATIONS MAY BE REVISED BY THE ENGINEER DUE TO ACTUAL SOIL CONDITIONS FOUND DURING EXCAVATIONS. THE CONTRACTOR IS TO NOTIFY THE ENGINEER IMMEDIATELY IF WEAK SOIL, HIGH WATER, DELETERIOUS MATERIAL, UNSUITABLE FILL, OR ANY OTHER CONDITIONS AFFECTING THE BEARING CAPACITY OF THE SOIL ARE UNCOVERED DURING EXCAVATIONS. ALL FOOTINGS, CAISSONS, PILES, AND PIERS SHALL BE CENTERED UNDER SUPPORTED MEMBERS, UNLESS OTHERWISE SPECIFICALLY NOTED. ASSUMED ALLOWABLE SOIL BEARING PRESSURE = 3000 PSF.

9. FOUNDATIONS WALLS TO BE POURED IN ALTERNATE LENGTHS, WITH EACH POUR NOT EXCEEDING 25 FEET. CONSTRUCTION JOINTS TO BE PLACED AT POINTS OF MINIMUM SHEAR. HORIZONTAL JOINTS TO BE USED ONLY WHERE SHOWN ON THE DRAWINGS.

10. THE CONTRACTOR SHALL INSTALL OR GIVE OTHER TRADES INVOLVED IN THE PROJECT AMPLE TIME TO INSTALL BOLTS, PLATES, NAILERS, SLOTS, CHASES, SLEEVES, ETC., REQUIRED IN THE OVERALL CONSTRUCTION. ALL DIMENSIONS TO BE VERIFIED BY THE CONTRACTOR BEFORE SETTING FORMS OR SLEEVES ARE IN PLACE.

STATE OF VERMONT ROBERT J. DIMPERIO NO. 5610 REGISTERED PROFESSIONAL ENGINEER

Rev No	Date	Description	Made by	Checked by	App'd by

NEW AIRPORT HANGAR
EDWARD F. KNAPP AIRPORT
SECTIONS, DETAILS, AND NOTES
PROJECT NO. AIR 03 2073

S3

CHENETTE ENGINEERING, INC.
50 STATE STREET
MONTPELIER, VERMONT 05602

Sheet	of
Scale	AS NOTED
Des. By	RJG
Drn. By	DDH
Chk. By	MJC
Date	AUG 1990
Dwg.	22-002-2

\HANGARS\KNAPP\S3.DWG