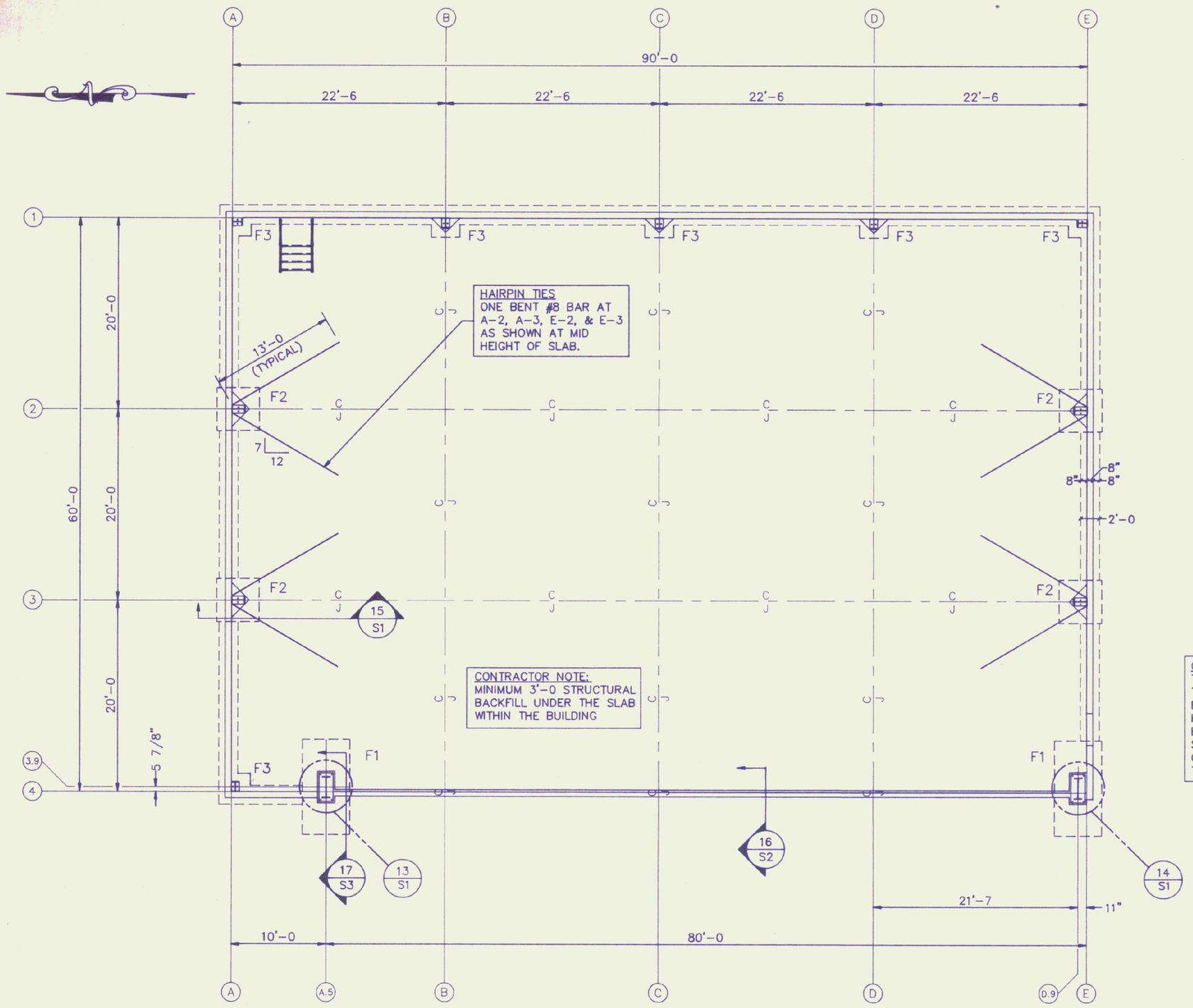

HAIRPIN TIES
ONE BENT #8 BAR AT A-2, A-3, E-2, & E-3 AS SHOWN AT MID HEIGHT OF SLAB.

CONTRACTOR NOTE:
MINIMUM 3'-0 STRUCTURAL BACKFILL UNDER THE SLAB WITHIN THE BUILDING

FOUNDATION PLAN

SCALE: 1/8"=1'-0

1. SLAB-ON-GRADE TO BE 6" THICK REINFORCED WITH WWF 6x6 - 6/6.
2. ELEVATION TOP OF FOOTING = 1123'-8 UNLESS OTHERWISE NOTED.

CONTRACTOR NOTE:
THE FOUNDATION DESIGN SHOWN ASSUMES TYPICAL FOUNDATION LOADS FROM A METAL BUILDING OF THIS TYPE. ACTUAL PIER, HAIRPIN, AND FOOTING SIZES MAY HAVE TO BE REVISED WHEN THE CONTRACTOR'S SUPER STRUCTURE DESIGN IS FINALIZED. THE CONTRACTOR'S BID SHOULD BE ADJUSTED TO ABSORB THESE POTENTIAL CHANGES.

FOOTING SCHEDULE			
MARK	SIZE	REINFORCING	REMARKS
F1	5'-0 X 10'-0 X 1'-0 DEEP	#7'S @ 6" O/C E.W. (BOT) #6'S @ 12" O/C N.S. (BOT)	DOOR FRAME FOOTING
F2	4'-6 X 4'-6 X 1'-0 DEEP	#6'S @ 12" O/C EA. WAY (BOTTOM)	SEE CONTRACTOR NOTE THIS DRAWING
F3	3'-0 X 3'-0 X 1'-0 DEEP	#5'S @ 12" O/C EA. WAY (BOTTOM)	END - WALL FOOTING

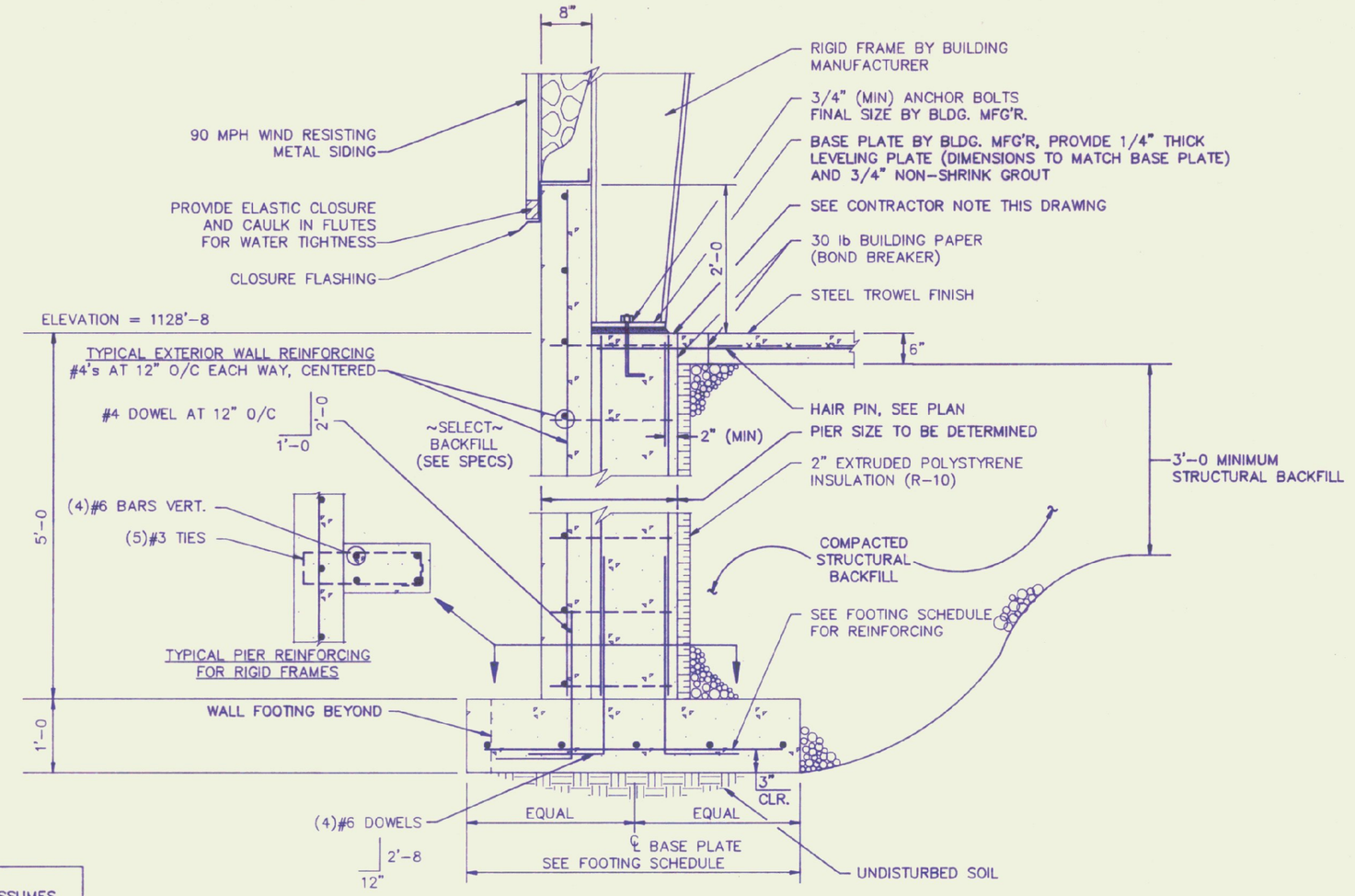

SECTION

SCALE: 3/4"=1'-0

15 / S1

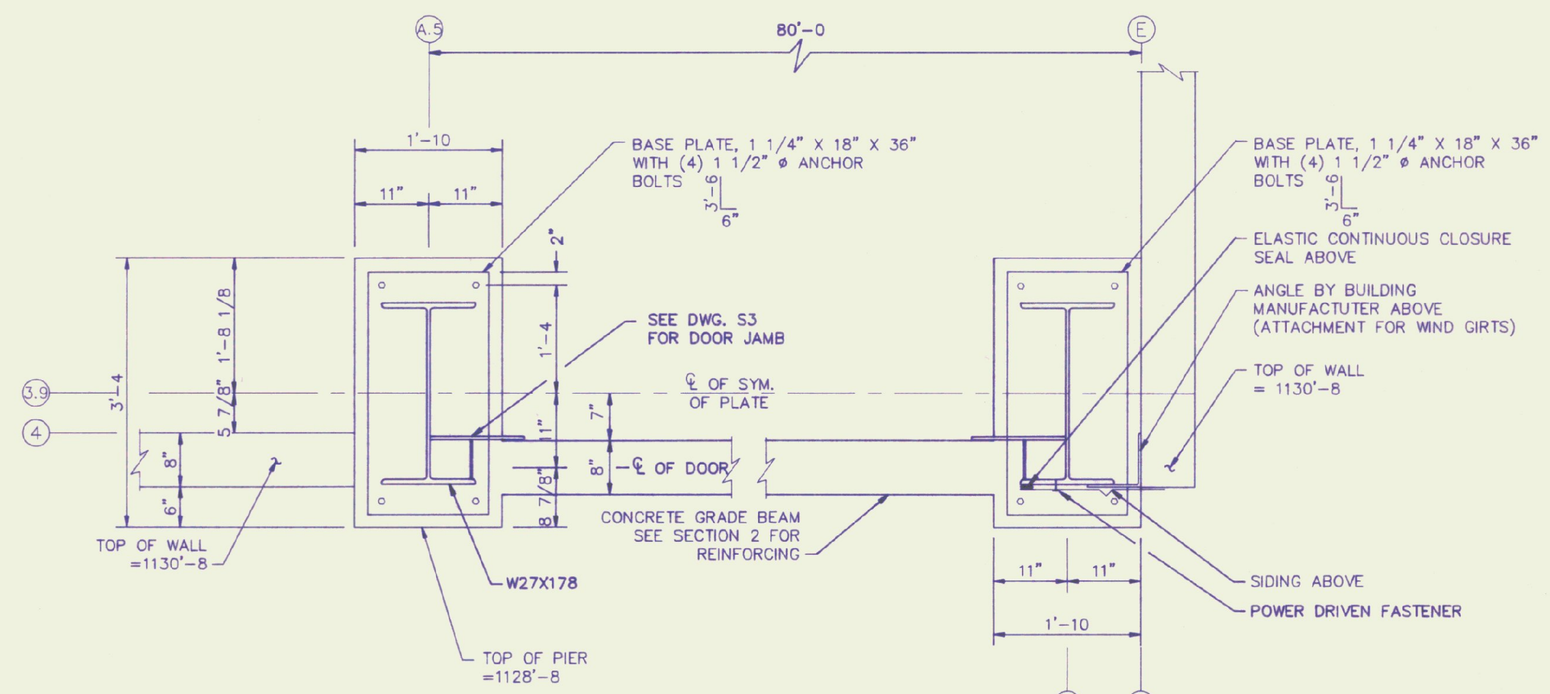

DETAIL

SCALE: 3/4"=1'-0

13 / S1

DETAIL

SCALE: 3/4"=1'-0

14 / S1

Rev No	Date	Description	Made by	Checked by	App'd by

NEW AIRPORT HANGAR
EDWARD F. KNAPP AIRPORT
FOUNDATION PLAN AND DETAILS
PROJECT NO. AIR 03 2073

S1

STATE OF VERMONT ROBERT J. GIRARD No. 5618 REGISTERED PROFESSIONAL ENGINEER

CHENETTE ENGINEERING, INC.
50 STATE STREET
MONTPELIER, VERMONT 05602

Sheet	of
Scale	AS NOTED
Des. By	RJG
Drn. By	DDH
Chk. By	MJC
Date	AUG 1990
Dwg.	22-002-2

\HANGARS\KNAPP\S1.DWG