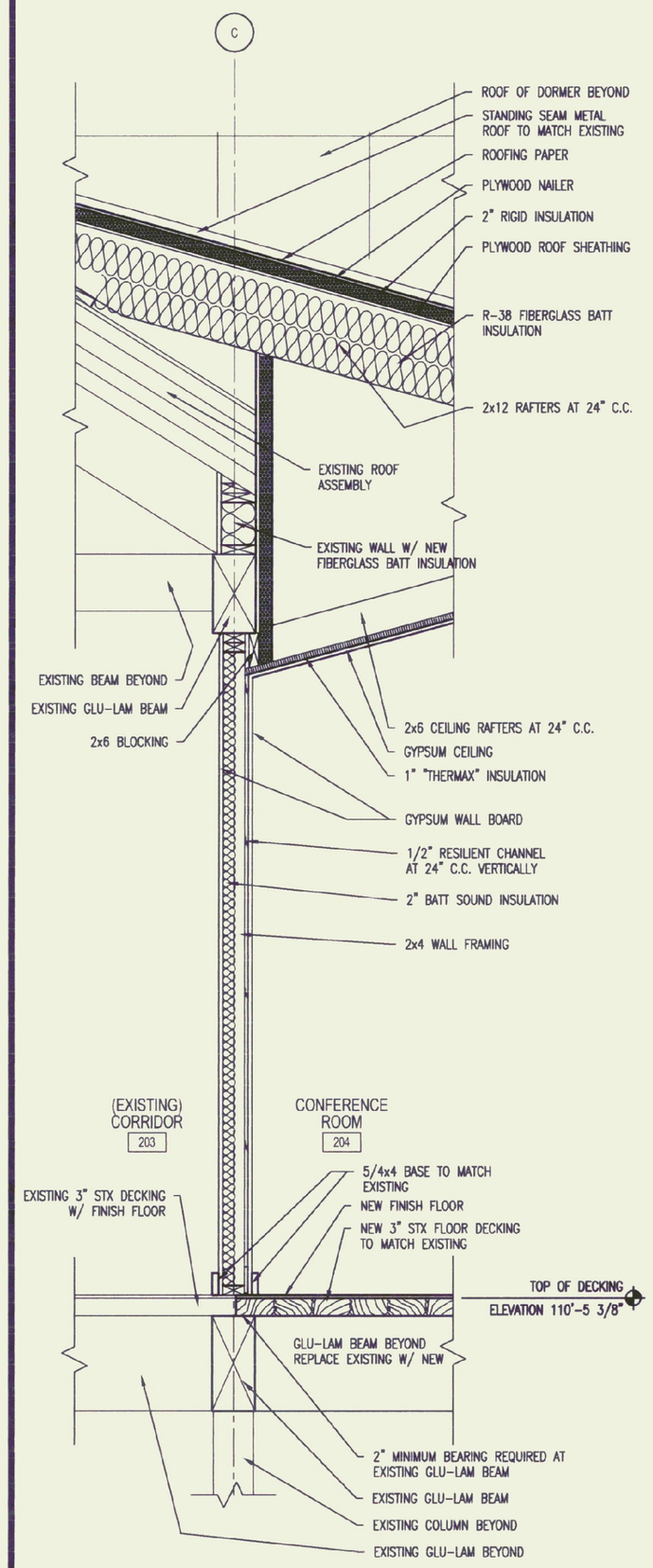

1 A6.1 **INTERIOR WALL SECTION**

SCALE: 3/4" = 1'-0"

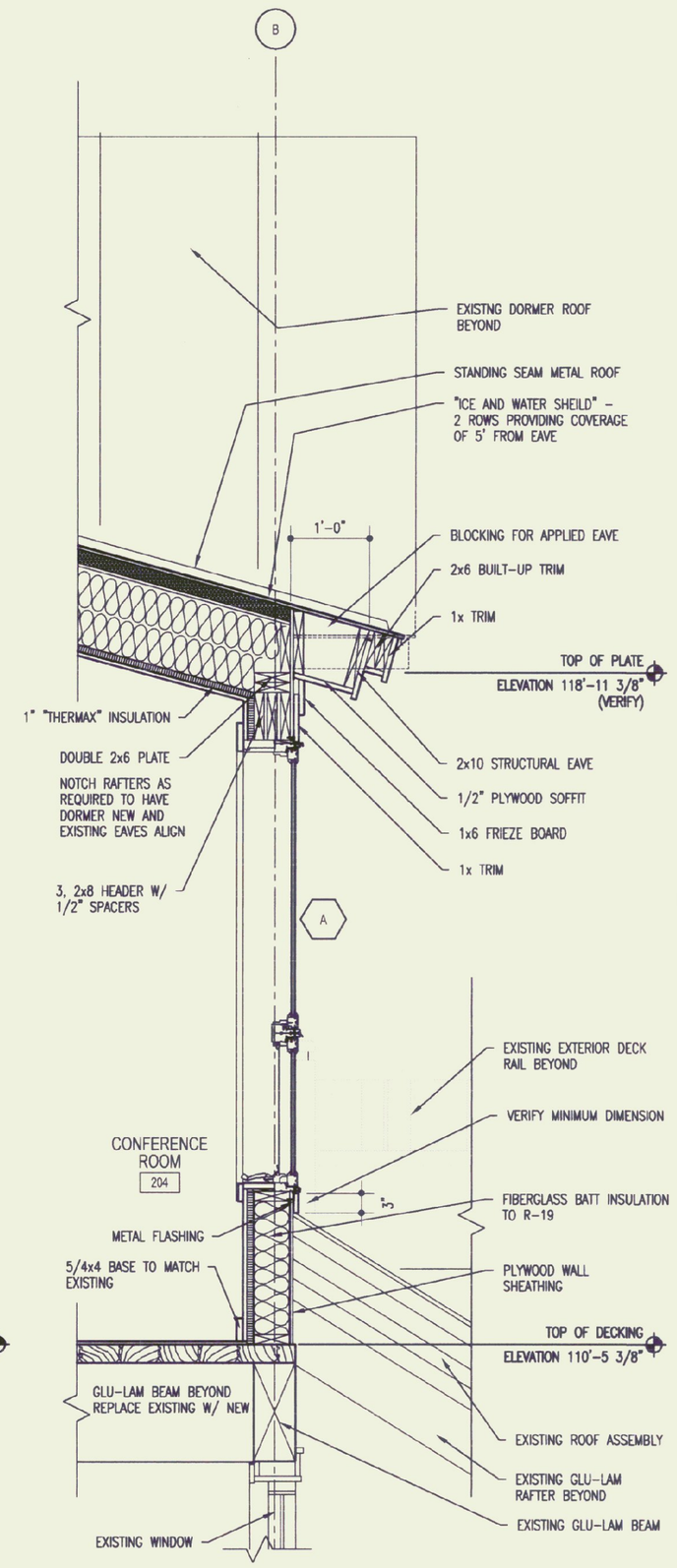

2 A6.1 **WALL SECTION AT WINDOW**

SCALE: 3/4" = 1'-0"

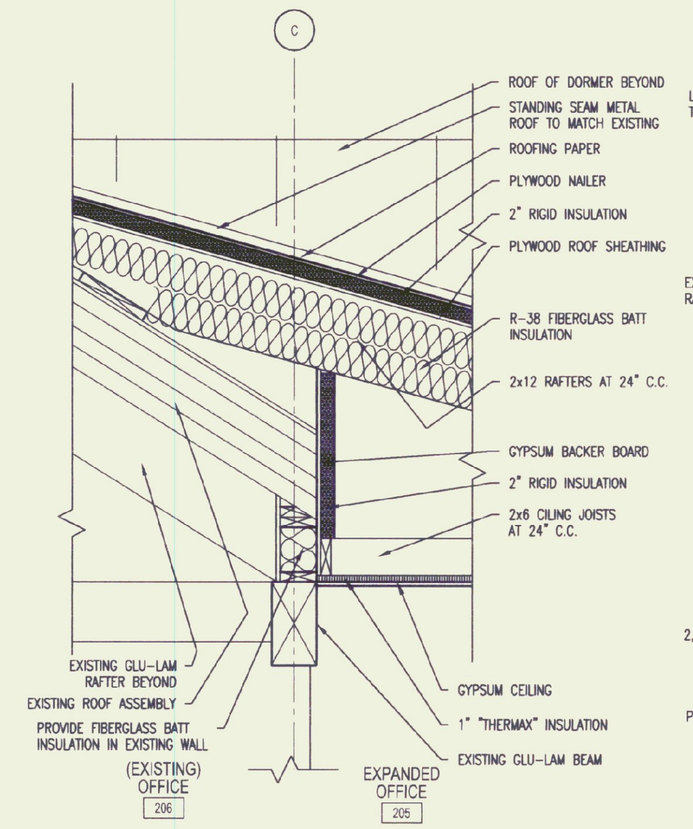

3 A6.1 **DETAIL AT EXISTING ROOF BEAM**

SCALE: 3/4" = 1'-0"

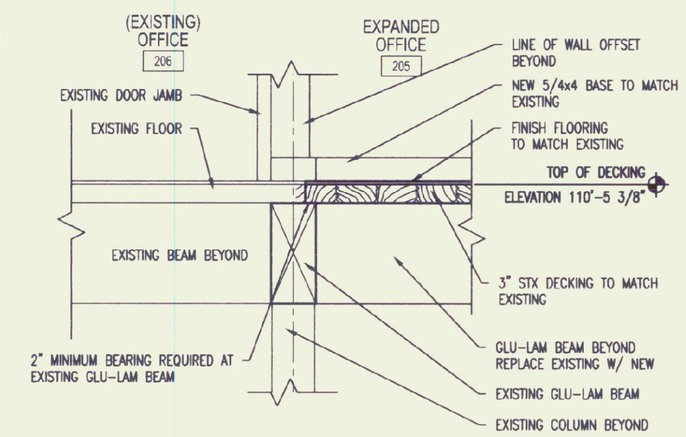

4 A6.1 **DETAIL AT EXISTING FLOOR BEAM**

SCALE: 3/4" = 1'-0"

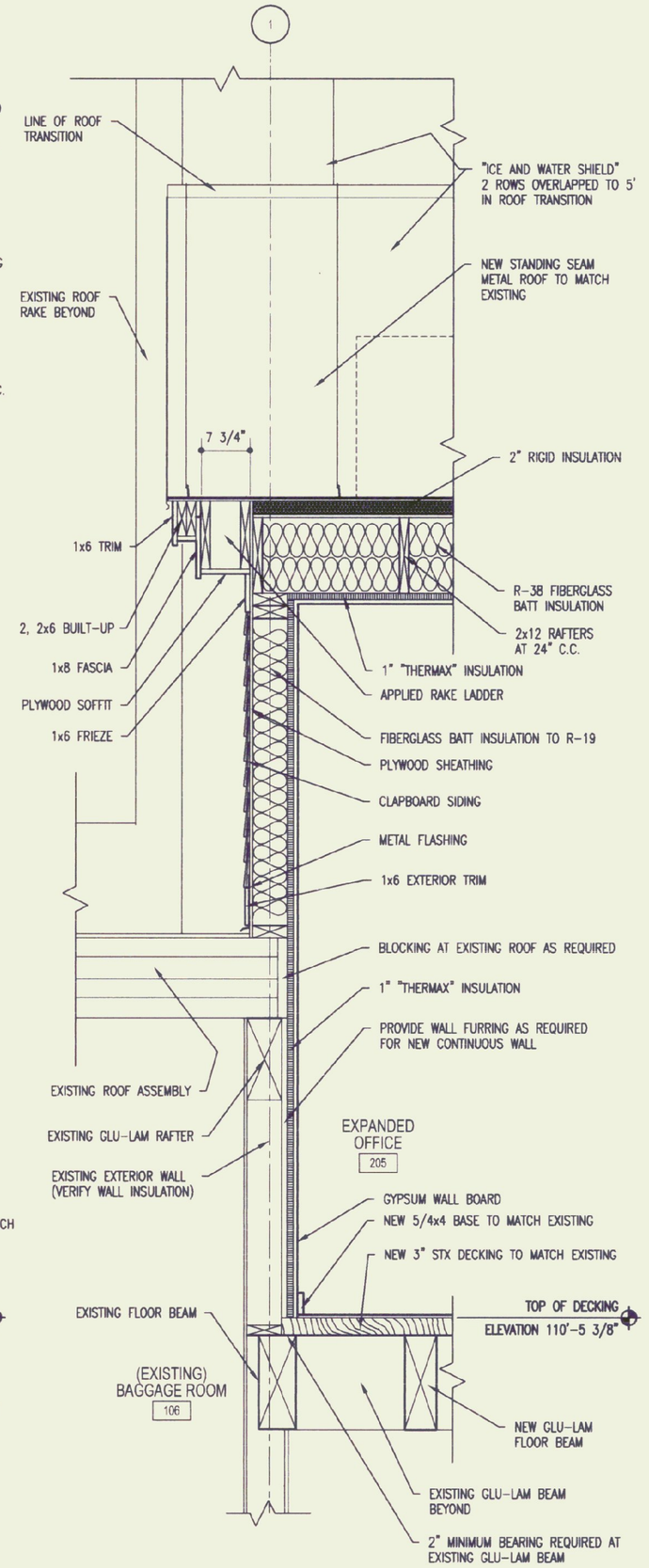

5 A6.1 **SHED DORMER WALL SECTION**

SCALE: 3/4" = 1'-0"

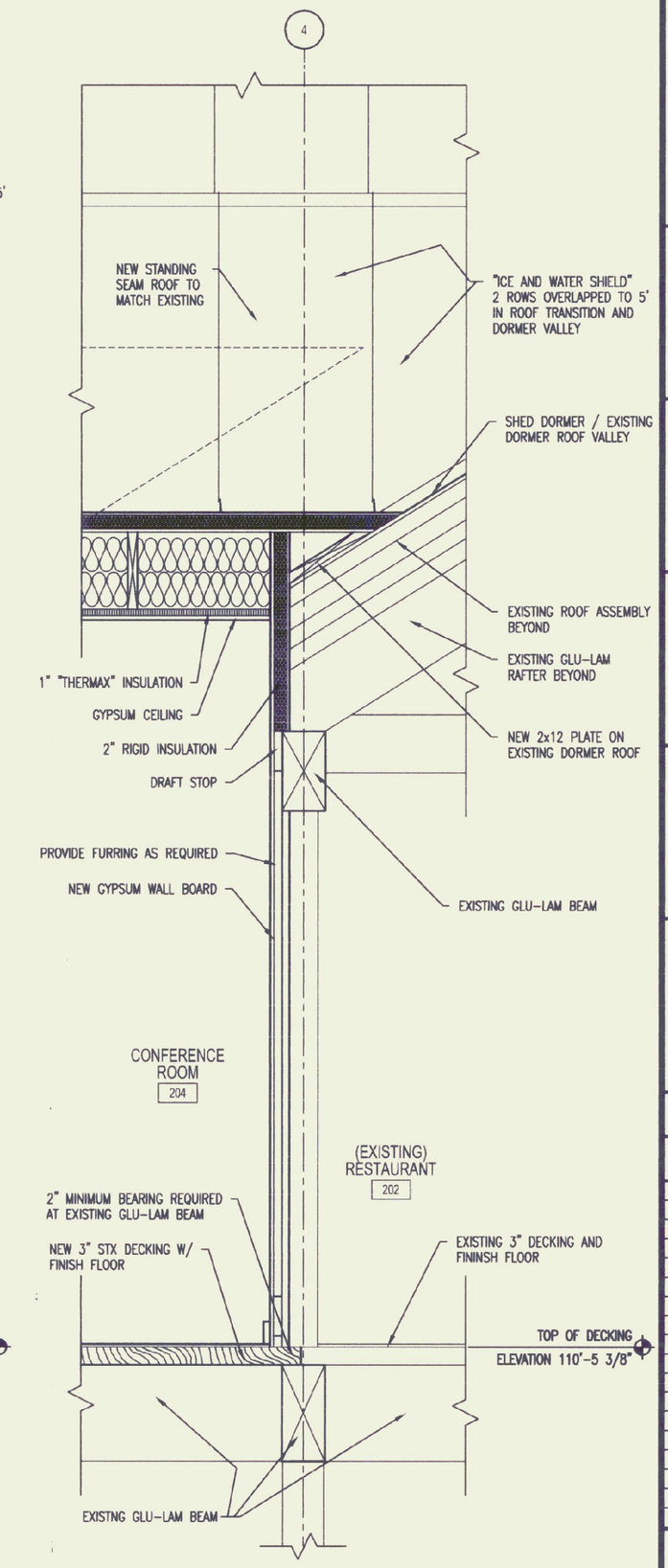

6 A6.1 **WALL SECTION AT EXISTING WALL**

SCALE: 3/4" = 1'-0"

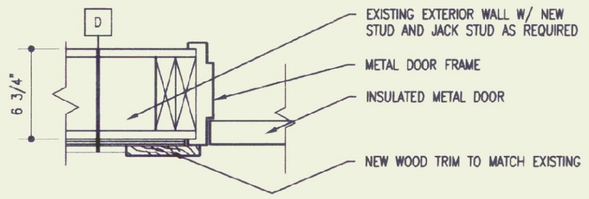

9 A6.1 **EXTERIOR DOOR JAMB DETAIL**

SCALE 1 1/2"=1'-0"

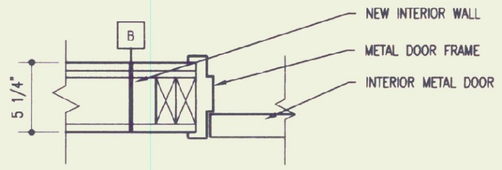

11 A6.1 **INTERIOR DOOR JAMB DETAIL**

SCALE X"=1'-0"

13 A6.1 **NEW WINDOW HEAD DETAIL**

SCALE 1 1/2"=1'-0"

15 A6.1 **TYPICAL WINDOW JAMB**

SCALE 1 1/2"=1'-0"

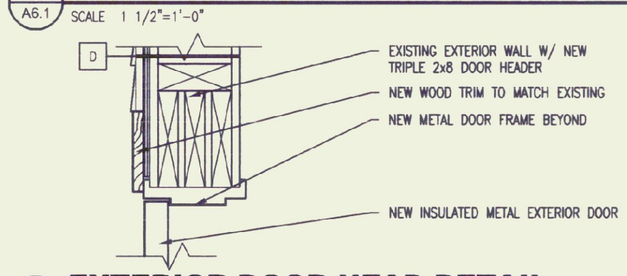

10 A6.1 **EXTERIOR DOOR HEAD DETAIL**

SCALE 1 1/2"=1'-0"

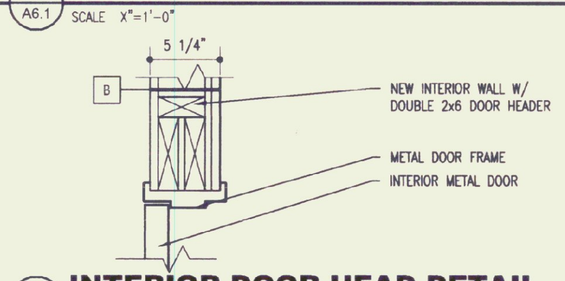

12 A6.1 **INTERIOR DOOR HEAD DETAIL**

SCALE X"=1'-0"

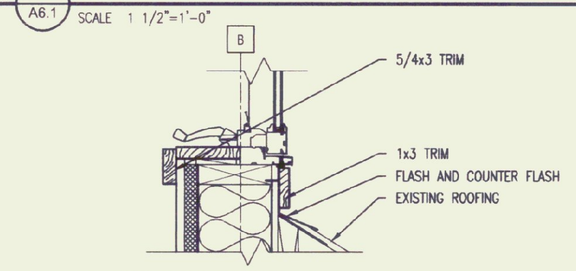

14 A6.1 **NEW WINDOW SILL DETAIL**

SCALE 1 1/2"=1'-0"

BMZA
Architects & Planners
Browning | Moore | Zucker | Ackerman
103 Wales Street
Rutland, Vermont 05701
Tel 802-773-8245
Fax 802-773-8235
info@bmza.com
www.bmza.com

W.V. ENGINEERING ASSOCIATES, P.C.
MECHANICAL AND ELECTRICAL ENGINEERING
11 KING COURT
KEENE, NEW HAMPSHIRE 03431
TELEPHONE: 603-352-7007
FAX: 603-352-7005

ZAREMBA-SOPKO ASSOCIATES, PLLC
STRUCTURAL ENGINEERING
5 BROADWAY, SUITE 203
TROY, NEW YORK 12180
TELEPHONE: 518-273-2555
FAX: 518-273-2552

PROJECT MANAGEMENT: STATE OF VERMONT
DEPT. OF BUILDINGS & GENERAL SERVICES
2 GOVERNOR AIKEN AVENUE
MONTPELIER, VERMONT 05633
TEL. 802-828-3314
FAX 802-828-3533

BUILDING OWNER: STATE OF VERMONT
AGENCY OF TRANSPORTATION
DEPT. OF MAINTENANCE AND AVIATION
NATIONAL LIFE BUILDING, DRAWER 33
MONTPELIER, VERMONT 05633-5001
TEL. 802-828-5752/ FAX 802-828-2848

JANUARY 2002

BID SET

NO.	REVISION	DATE
01	RELEASED FOR AGENCY REVIEW	06/20/01
02	FINAL PRE-BID REVIEW	05/31/01
03	BID SET	11/15/01
03	BID DATE	01/30/02

Renovations and Addition for the

RUTLAND STATE AIRPORT
1002 AIRPORT ROAD, TERMINAL BUILDING
NORTH CLARENDON, VERMONT 05759
TEL. 802-786-8881
FAX 802-773-5660

WALL SECTIONS AND DETAILS

PROJECT: R99060 | DRAWN: RNB | CHECKED: CPB

PROFESSIONAL SEAL

A

6.1