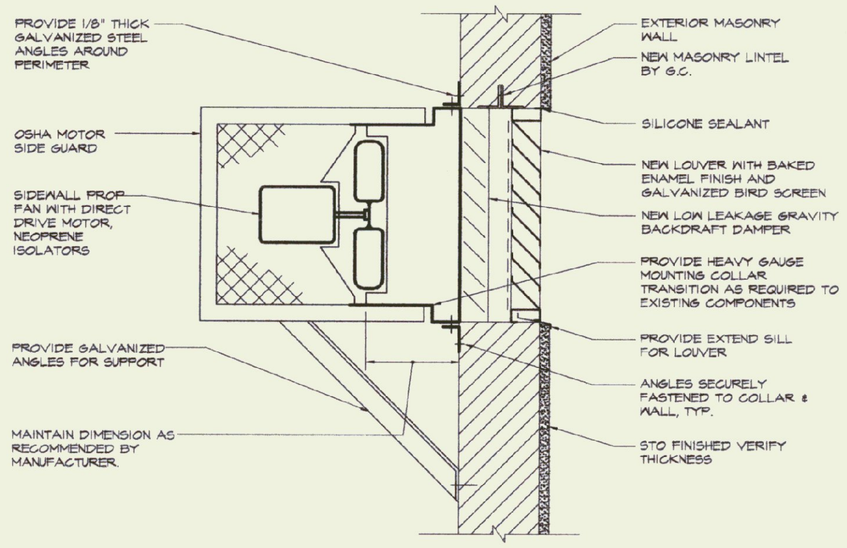

SIDEWALL EXHAUST FAN DETAIL

NOT TO SCALE

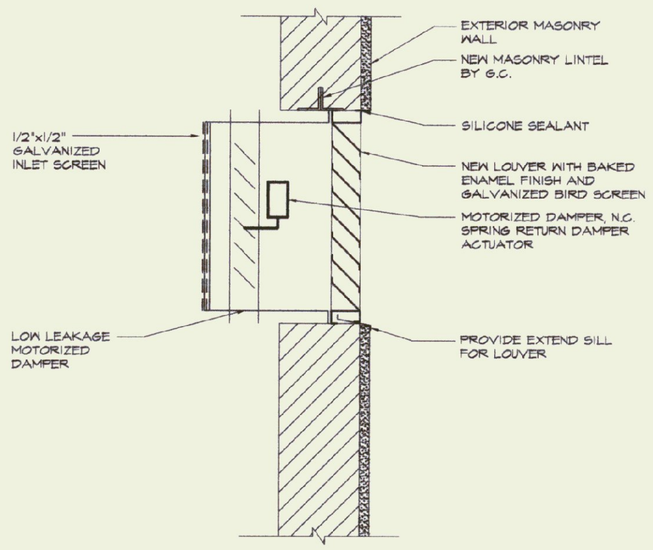

INTAKE LOUVER DETAIL

NOT TO SCALE

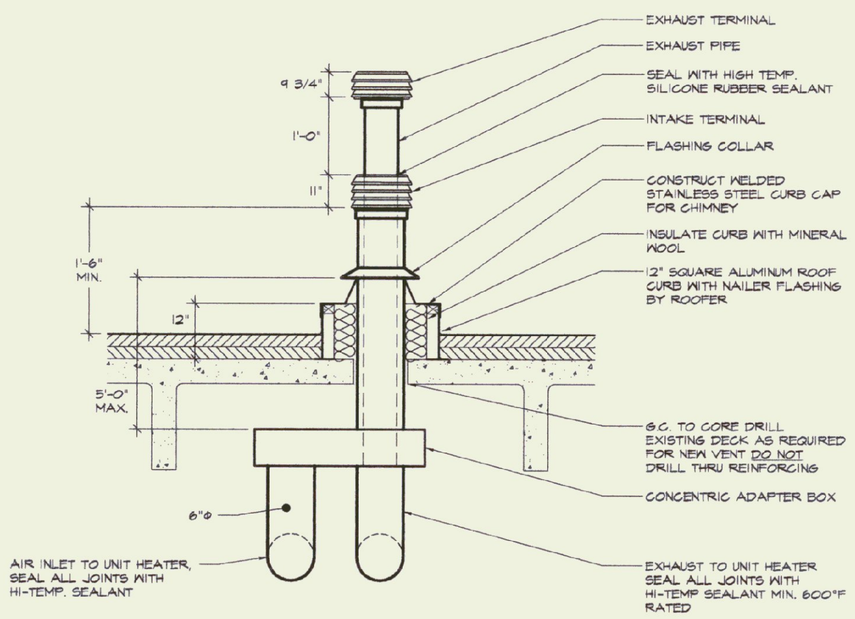

EXHAUST AND COMBUSTION AIR PIPE TERMINATION DETAIL

NOT TO SCALE

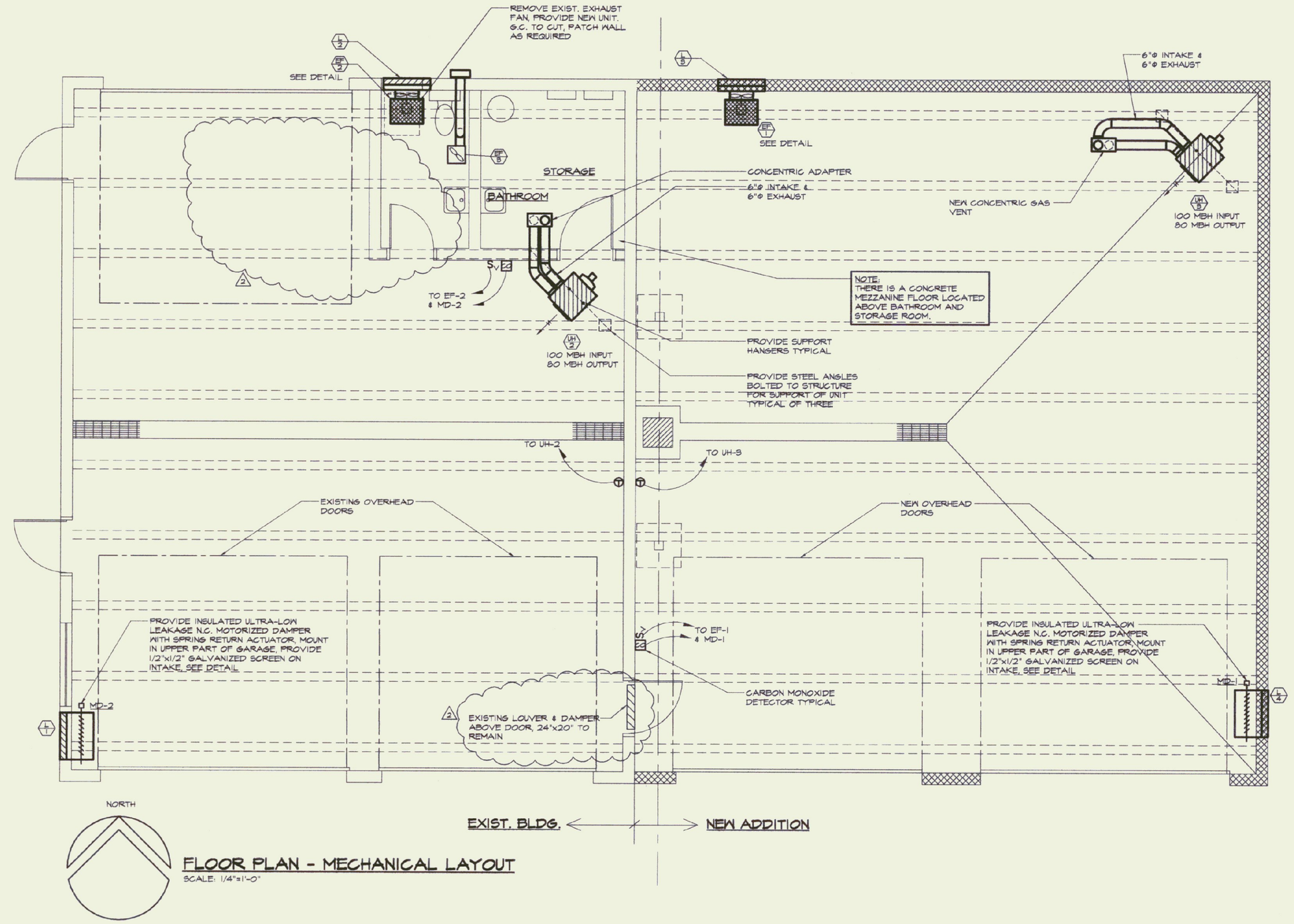

FLOOR PLAN - MECHANICAL LAYOUT

SCALE: 1/4"=1'-0"

NO.	ISSUED FOR	DATE
2	COST REDUCING CHANGES	7-22-02
1	BIDDING	5-24-02

LANE ASSOCIATES CONSULTING ENGINEERS, P.C.

HEATING, VENTILATION, & AIR CONDITIONING, PLUMBING, FIRE PROTECTION, & ELECTRICAL

CHARLES F. LANE, P.E.
DANIEL W. DUPRAS, P.E.

51 KILLINGTON AVENUE,
RUTLAND, VERMONT 05701

TELEPHONE: (802)747-3346
FAX/MODEM: (802)747-3356

MAIN FLOOR PLAN
MECHANICAL LAYOUT

RUTLAND STATE AIRPORT
CLARENDON, VERMONT
ADDITION TO FIRE/CRASH/
RESCUE BUILDING

M1

APPR:	DWD	DRAWN:	BWM	SCALE:	AS NOTED	PROJ. NO.	0132-01

X:\0132\01\drawings\mech\0132-M01.dwg, Layout1, 07/19/02 03:03:59 PM, © LANE ASSOCIATES CONSULTING ENGINEERS PC, 2002