ISSUE RECORD			
NO	DATE	DESCRIPTION	NO PRINTS
1	12-17-84	△1 REVISIONS SIMPSON YELLOW HILITE FOR △1	1
	12-20-84	ADT-OPERATIONS-1 △1 YELLOW HILITE	2
		SIMPSON 4, L & T-1	
		KCE-1, WW-1	7

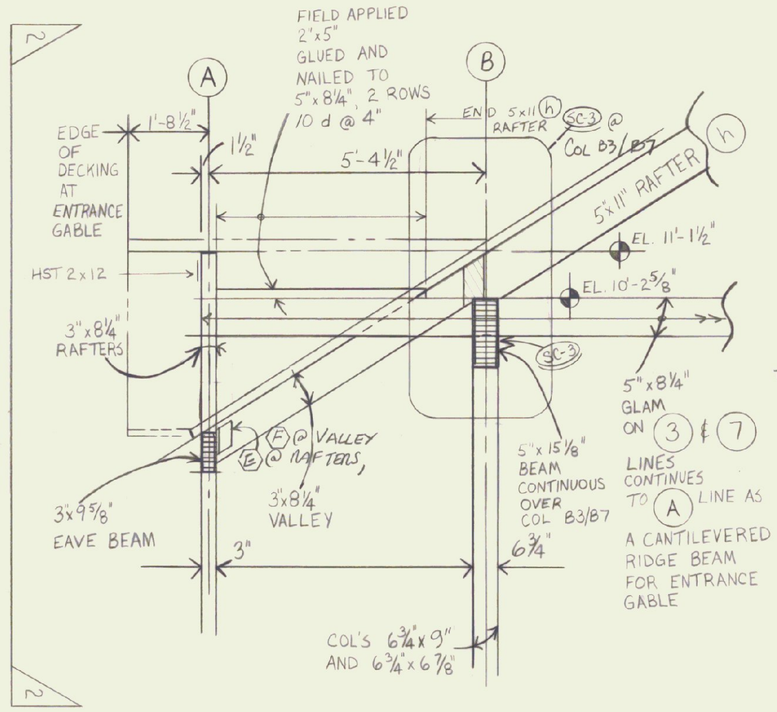

1-1 SECTION - AIR-SIDE GABLE ENTRANCE FRAMING

SC. ½"=1'-0"

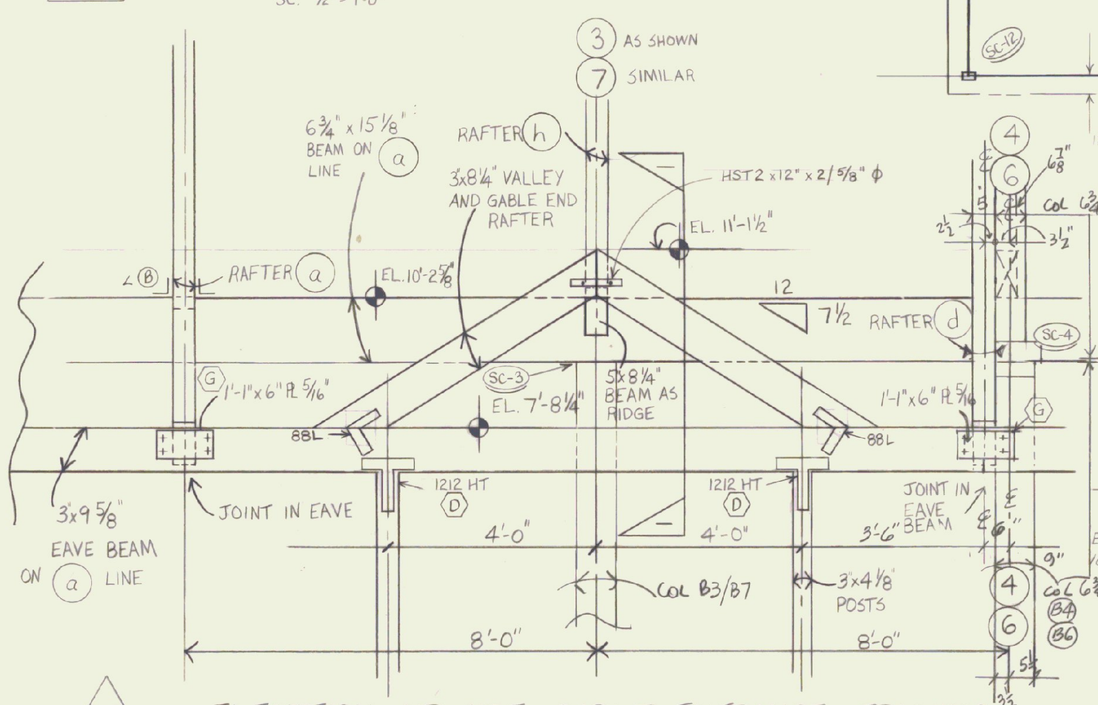

2-2 ELEVATION - AIR-SIDE GABLE ENTRANCE FRAMING

SC. ½"=1'-0"

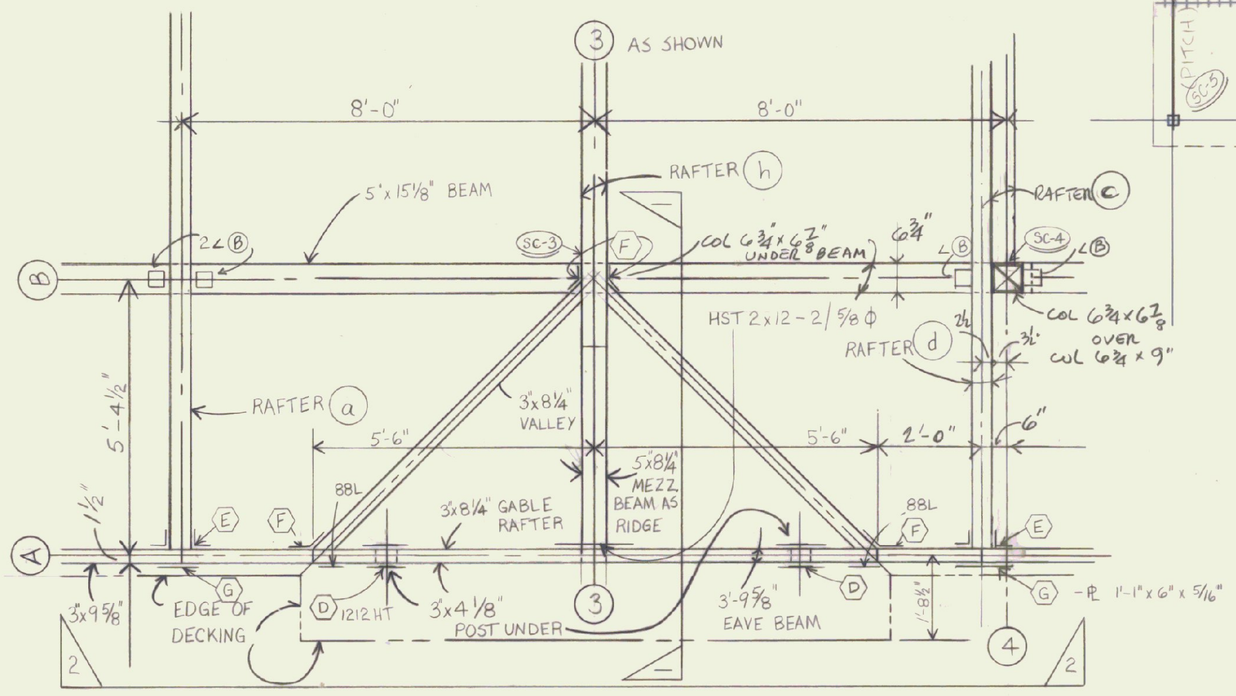

3-3 FRAMING PLAN - AIR-SIDE GABLE ENTRANCE ROOF DETAIL

SC. ½"=1'-0"

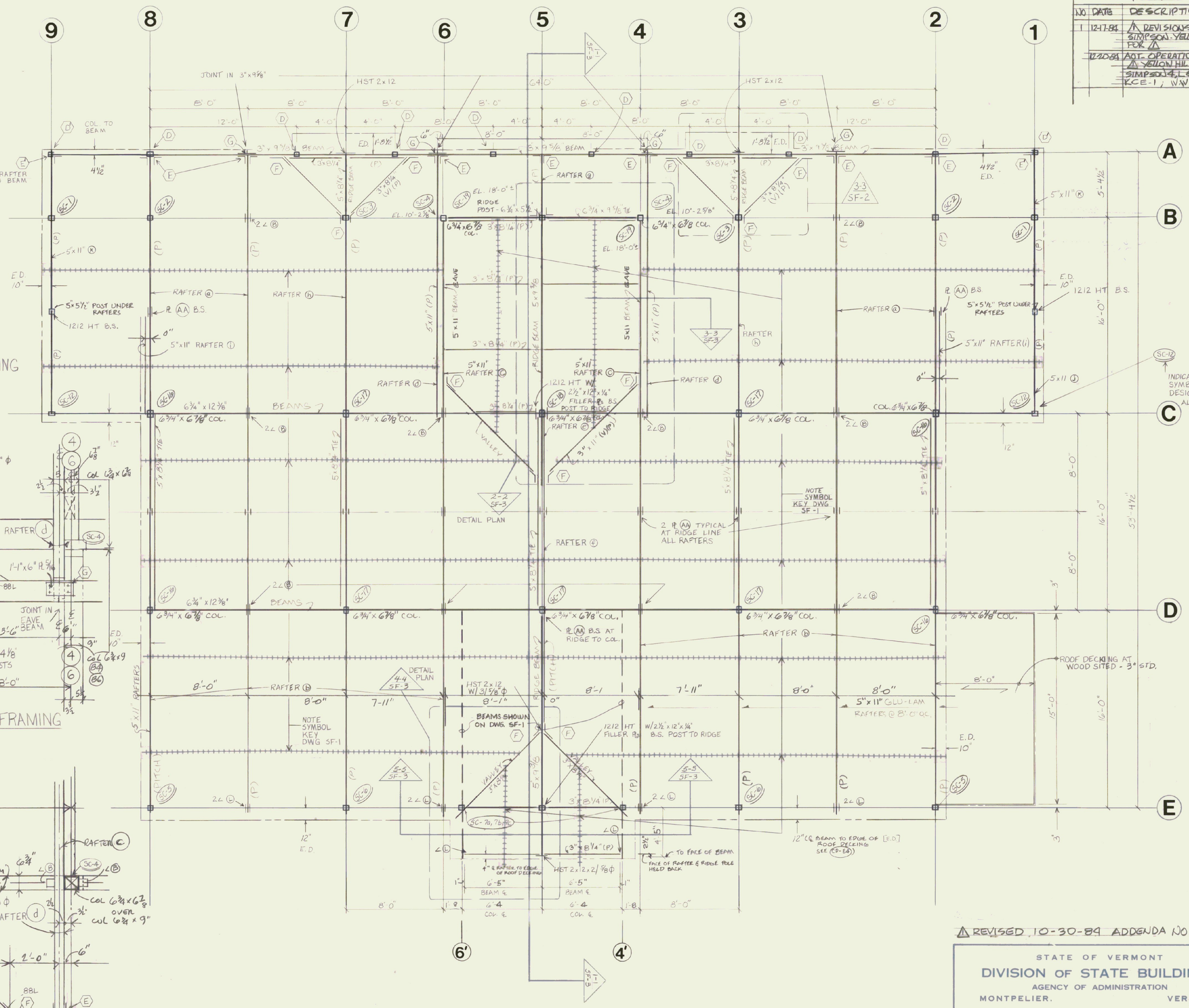

△1 REVISED 10-30-84 ADDENDA NO. 1.

STATE OF VERMONT
DIVISION OF STATE BUILDINGS
AGENCY OF ADMINISTRATION
MONTPELIER, VERMONT

RUTLAND TERMINAL BUILDING AIR 23-2024

ROOF FRAMING

RUTLAND STATE AIRPORT
CLARENDON, VERMONT

DATE: 6/8/84	SCALE: 1/4" = 1'-0"	REVISIONS: 7/10/84 S.A. MULHERN	DWG. NO. SF-2
DRAWN BY: JPO	APPROVED BY: DA FOR DSB	△1 10-30-84	12 OF 20

8/10/84