ISSUE RECORD			
NO	DATE	DESCRIPTION	NO PRINTS
1	12-1-84	△1 REVISIONS SIMPSON-YELLOW HILITE FOR △1	1
	12-20-84	AOT-OPERATIONS-1 △1 YELLOW HILITE SIMPSON-4, L&I-1 KCE-1, WW-1	2
			7

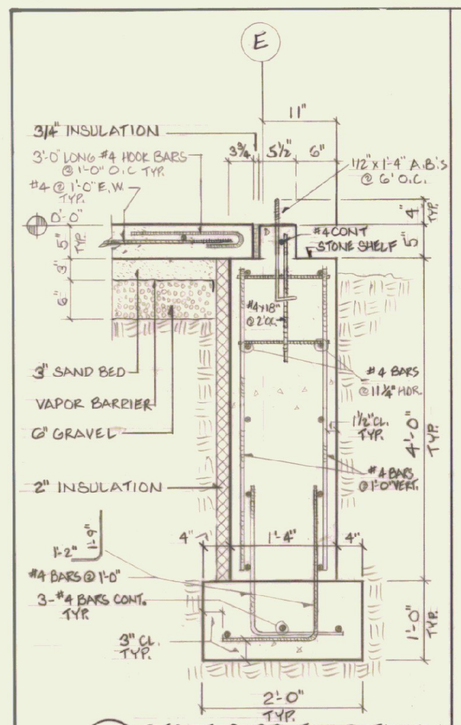

1 STONE CURB FOUNDATION
ALL DETAILS THIS SHEET @ 3/4" = 1'-0"

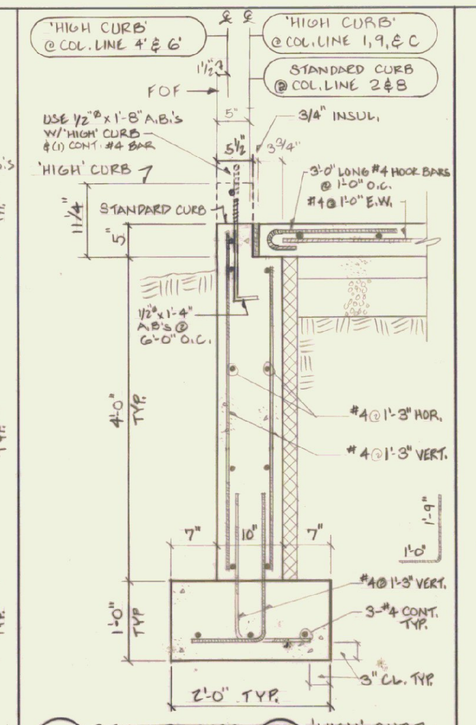

2 STANDARD CURB FOUNDATION
2A 'HIGH' CURB FOUNDATION

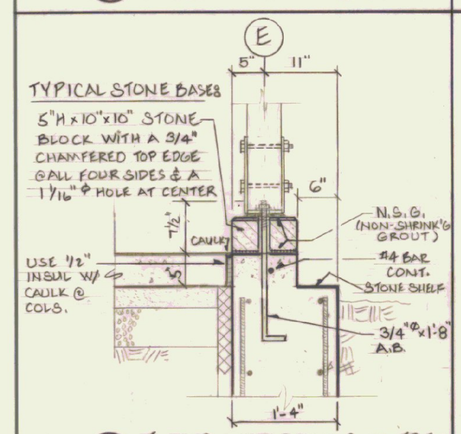

3 EXT. COL. @ STONE CURB FDTN

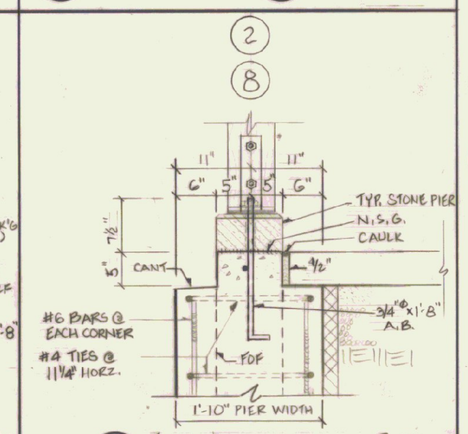

4 EXT. COL. @ WALL PIER

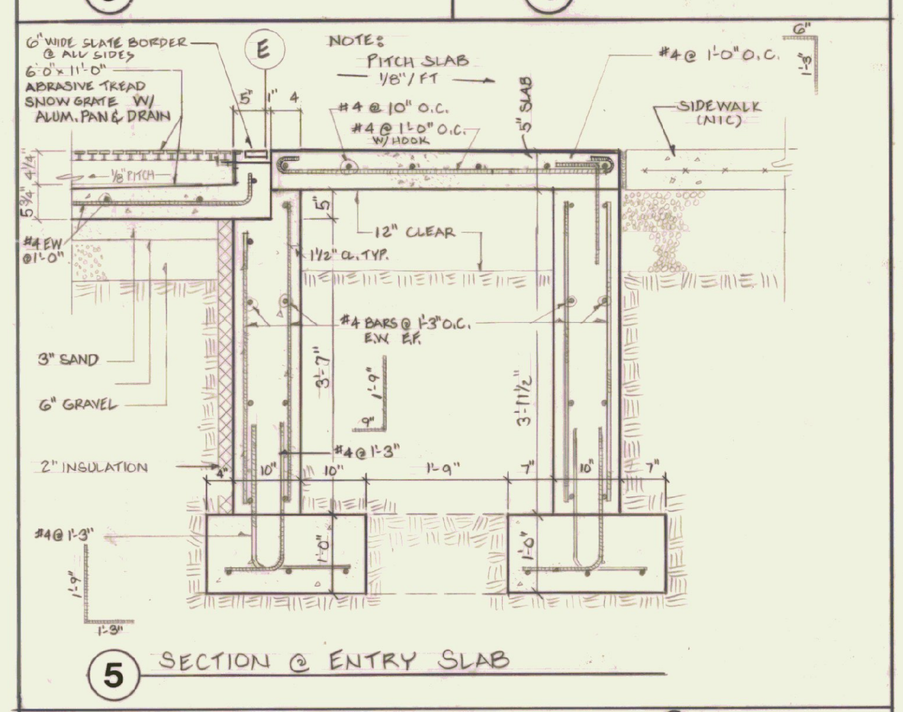

5 SECTION @ ENTRY SLAB

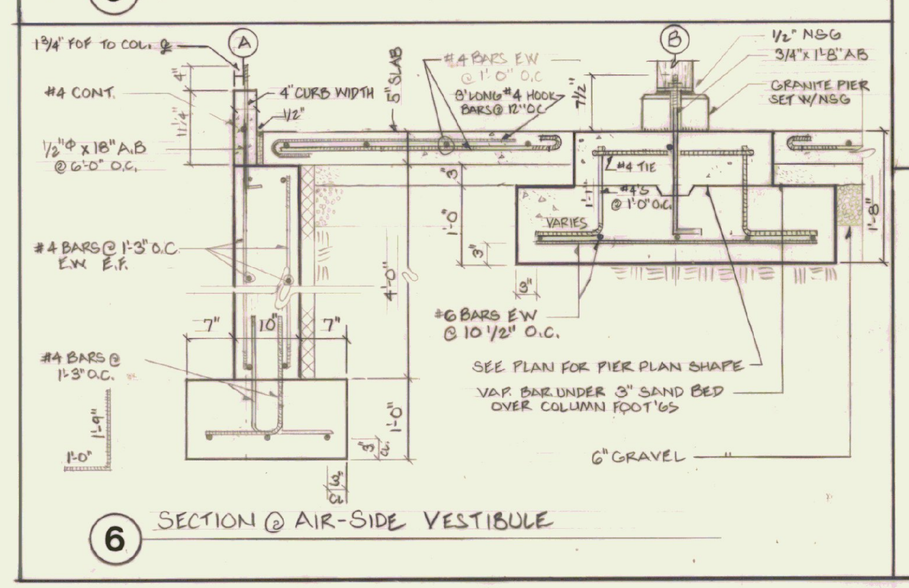

6 SECTION @ AIR-SIDE VESTIBULE

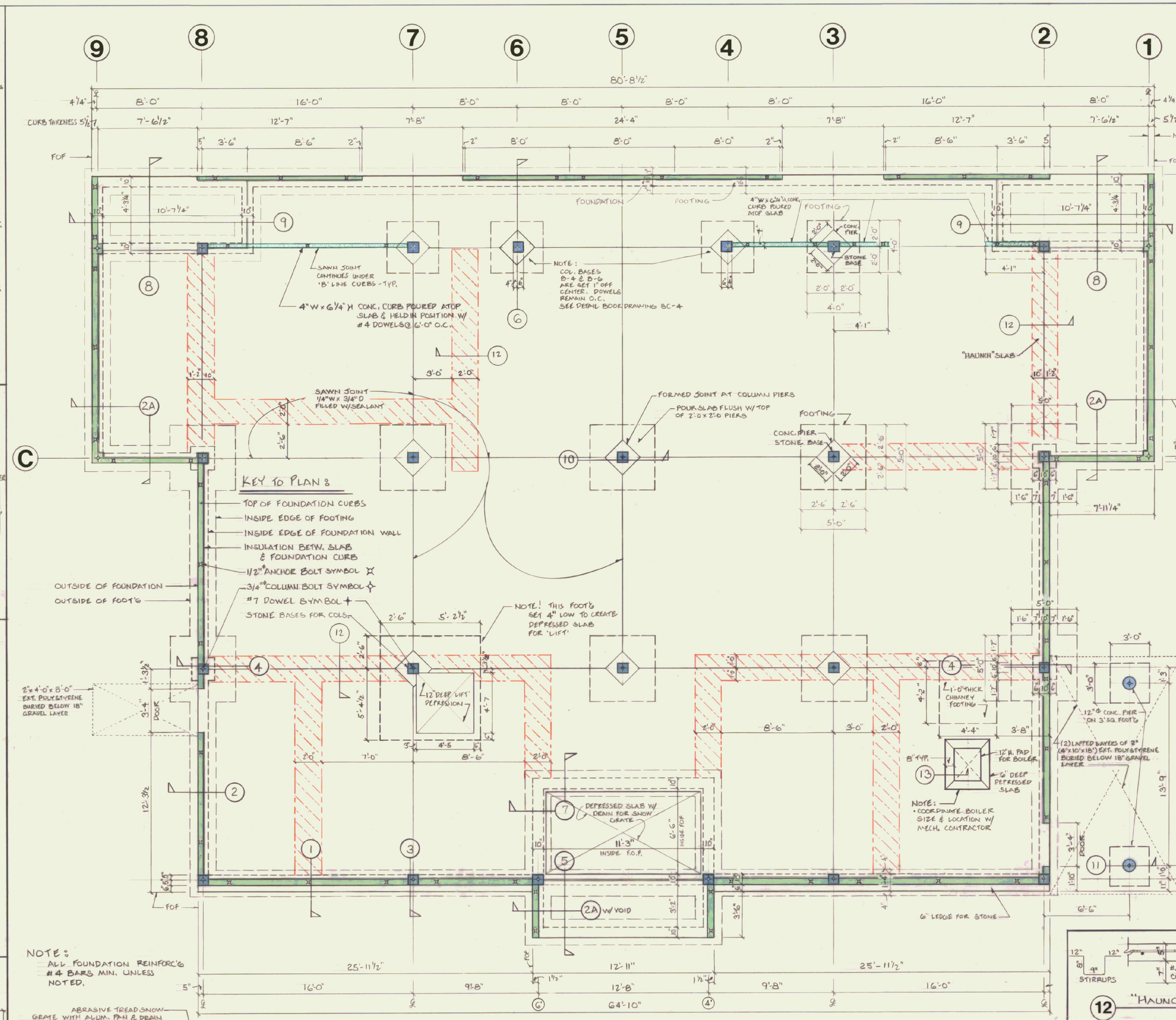

13 BOILER PAD & MOAT

NOTE:
ALL FOUNDATION REINFORC'G #4 BARS MIN. UNLESS NOTED.

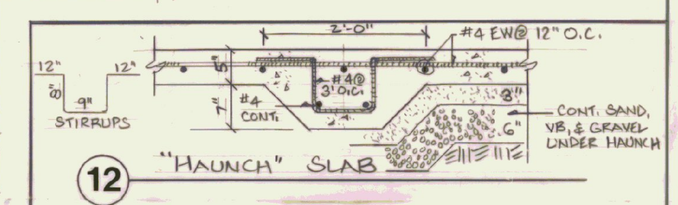

12 "HAUNCH" SLAB

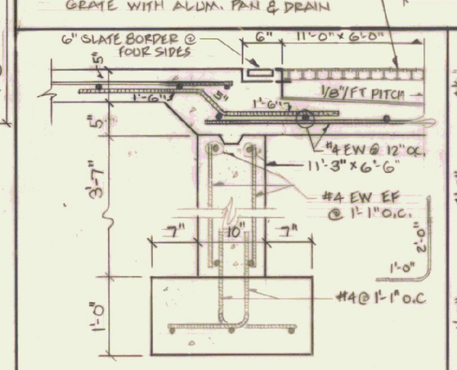

7 PIT FOR SNOW GRATE W/ ALUM. PAN & DRAIN

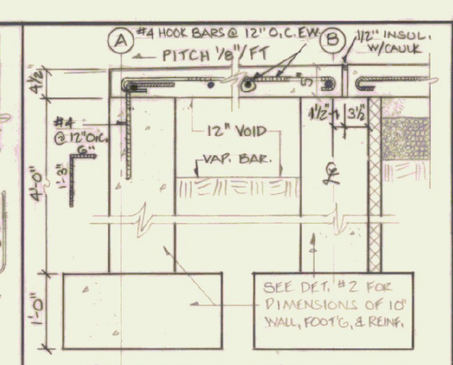

8 FOUNDATION @ BAGGAGE PORTS

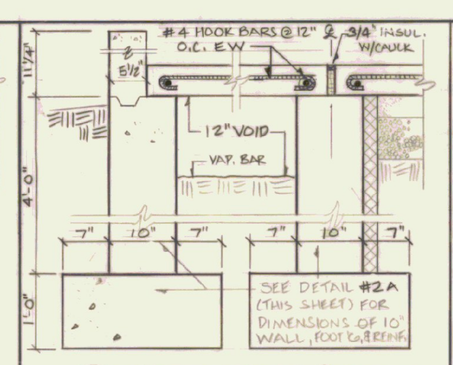

9 FOUNDATION @ BAGGAGE PORTS

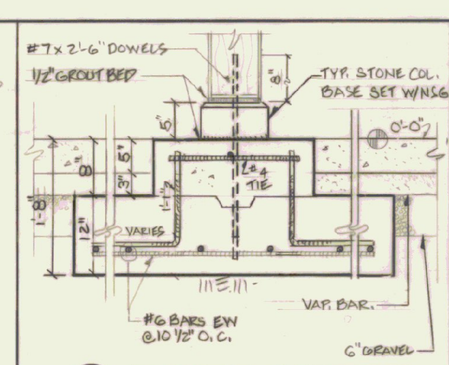

10 INTERIOR COLUMN PIER & FOOT'G

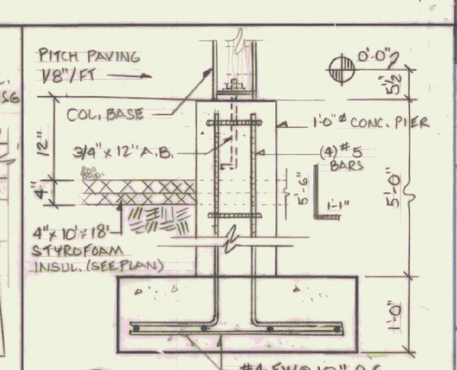

11 WOOD SHED PIER & FOOT'G

8/10/84

STATE OF VERMONT
DIVISION OF STATE BUILDINGS
AGENCY OF ADMINISTRATION
MONTPELIER, VERMONT

RUTLAND TERMINAL BUILDING AIR 23-2024

FOUNDATION PLAN

RUTLAND STATE AIRPORT
CLARENDON, VERMONT

DATE: 6-8-84	SCALE: PLAN @ 1/4" = 1'-0" DETAILS @ 3/4" = 1'-0"	REVISIONS: 7/2/84 S.A. MULHERN △1 10-30-84	DWG. NO. A-1
DRAWN BY: JPO	APPROVED BY: RA FOR DSB		3 OF 20